ICME2008 21st – 23rd May, 2008 [Johor Bahru, Johor, Malaysia]

International Conference on Mechanical and Manufacturing Engineering 2008

ICME 2008 Confirmed Participants [5th May 2008]

Num:	Date:	Category:	ID No:	First Name:	Last Name:	Institution/Organization:
1	7-Apr	MFG	ID_0001	Sivaprakasam	Thamizhmanii	Universiti Tun Hussein Onn Malaysia
2	18-Mar	MFG	ID_0004	Ragireddy	Venkatreddy	Aurora's Engineering College
3	11-Apr	MFG	ID_0006	Norazmein	Abdul Raman	Universiti Teknologi Malaysia
4	18-Mar	MFG	ID_0009	Khairur Rijal	Jamaludin	Universiti Kebangsaan Malaysia
5	18-Mar	MFG	ID_0011	Ahsan	Khan	International Islamic University Malaysia
6	28-Mar	MFG	ID_0013	Mohd Fadzil Faisae	Ab. Rashid	Universiti Malaysia Pahang
7	21-Mar	IE	ID_0016	Gholamreza	Esmaeilian	Universiti Putra Malaysia
8	17-Apr	MFG	ID_0020	Woei-Shyan	Lee	National Cheng Kung University
9	31-Mar	HFT	ID_0023	Wan Ahmad Najmi	Wan Mohamed	Universiti Teknologi MARA
10	18-Mar	IE	ID_0025	Nazatul Aini	Abd Majid	The University of Auckland
11	18-Mar	MFG	ID_0027	Zazuli	Mohid	Okayama University
12	18-Mar	MFG	ID_0028	Suleiman	Abdulkareem	International Islamic University Malaysia
13	18-Mar	IE	ID_0030	Hayati @ Habibah	Abdul Talib	Universiti Teknologi Malaysia
14	18-Mar	ME	ID_0034	Lee	Chang Chuan	Universiti Malaysia Perlis
15	31-Mar	HFT	ID_0035	Wan Ahmad Najmi	Wan Mohamed	Universiti Teknologi MARA
16	18-Mar	ME	ID_0038	Nagi	Elmagrabi	Universiti Kebangsaan Malaysia
17	18-Mar	HFT	ID_0041	Helmey Ramdhaney	Mohd Saiah	Universiti Putra Malaysia
18	4-Apr	IE	ID_0042	Erialdi	Syahrial	Proton
19	3-Apr	AU	ID_0043	Shahrin Hisham	Amirnordin	Universiti Tun Hussein Onn Malaysia
20	18-Mar	HFT	ID_0044	Suhaimi	Hassan	Universiti Sains Malaysia
21	23-Apr	ME	ID_0048	Faiz Redza	Ramli	Universiti Teknikal Malaysia Melaka
22	18-Mar	HFT	ID_0050	Nadia	Abdullah	Universiti Putra Malaysia
23	18-Mar	HFT	ID_0051	Syahrullail	Samion	Universiti Teknologi Malaysia
24	18-Mar	MFG	ID_0052	Mohammad Reza	Shahraki	Universiti Putra Malaysia
25	18-Mar	MFG	ID_0054	Azrul Azwan	Abdul Rahman	Universiti Teknikal Malaysia Melaka
26	19-Mar	IE	ID_0055	Effendi	Mohamad	Universiti Teknikal Malaysia Melaka
27	18-Mar	HFT	ID_0056	Ebrahim M. Ali	Alfegi	Universiti Kebangsaan Malaysia
28	31-Mar	ME	ID_0059	Siti Norbaya	Sahadan	Universiti Kebangsaan Malaysia
29	18-Mar	HFT	ID_0060	Lin	Hau-Chieh	National Chiao Tung University
30	18-Mar	HFT	ID_0062	Che Sidik	Nor Azwadi	Universiti Teknologi Malaysia
31	18-Mar	HFT	ID_0063	Che Sidik	Nor Azwadi	Universiti Teknologi Malaysia
32	18-Mar	IE	ID_0065	Izatul Hamimi	Abdul Razak	Universiti Sains Malaysia
33	18-Mar	MFG	ID_0067	Matthias	Graf von der Schulenburg	Technische Universitat Berlin
34	18-Mar	MFG	ID_0071	Azwan Iskandar	Azmi	Universiti Malaysia Perlis
35	18-Mar	HFT	ID_0074	Rizal Effendy	Mohd Nasir	Universiti Teknologi MARA
36	31-Mar	ME	ID_0075	Miminorazeansuhaila	Loman	Universiti Kebangsaan Malaysia
37	18-Mar	ME	ID_0076	Mas Irfan	P. Hidayat	Universiti Teknologi PETRONAS
38	6-Apr	MFG	ID_0078	Muhamad Nasir	Murad	Universiti Malaysia Perlis
39	9-Apr	MFG	ID_0083	Hashem	Ghariblu	Zanjan University
40	10-Apr	ME	ID_0085	Ramzyzan	Ramly	Universiti Teknologi MARA
41	3-Apr	MFG	ID_0087	Mohd Rashidi	Bin Maarof	Universiti Malaysia Pahang
42	18-Mar	MFG	ID_0089	A.K.M Nurul	Amin	International Islamic University Malaysia
43	29-Apr	MFG	ID_0089	Mohammad Ishtiyaq	Hossain	International Islamic University Malaysia
44	21-Mar	ME	ID_0090	Wahyudi	Martono	International Islamic University Malaysia
45	18-Mar	HFT	ID_0092	Shaharin	Sulaiman	Universiti Teknologi PETRONAS
46	18-Mar	MFG	ID_0094	A.K.M Nurul	Amin	International Islamic University Malaysia
47	18-Mar	HFT	ID_0097	Narahari	Marneni	Universiti Teknologi PETRONAS
48	25-Apr	MFG	ID_0098	Ahmad Majdi	Abdul Rani	Universiti Teknologi PETRONAS
49	18-Mar	ME	ID_0099	Rajendra Prasad	Sinha	Malaysia Maritime Academy
50	18-Mar	AU	ID_0102	Rajendra Prasad	Sinha	Malaysia Maritime Academy
51	18-Mar	IE	ID_0103	Azwan Iskandar	Azmi	Universiti Malaysia Perlis
52	9-Apr	ME	ID_0105	Amran	Ayob	Universiti Teknologi Malaysia
53	16-Apr	IE	ID_0107	Salleh Ahmad	Bareduan	Universiti Tun Hussein Onn Malaysia
54	18-Mar	IE	ID_0110	Magdalene	Andrew Munot	Monash University, Australia
55	30-Mar	HFT	ID_0114	Mohsen	Mazidi Sharfabadi	Islamic Azad University - Bafgh Branch
56	3-Apr	AU	ID_0115	Jagannath	Koravadi	Manipal Institute of Technology
57	4-Apr	ME	ID_0120	Tasnim	Ariff	University of Waikato
58	3-Apr	ME	ID_0122	Che Ku Eddy Nizwan	Che Ku Husin	Universiti Kebangsaan Malaysia
59	3-Apr	ME	ID_0124	Fauziana	Lamin	Universiti Kebangsaan Malaysia
60	18-Mar	MFG	ID_0125	Mohammad Yeakub	Ali	International Islamic University Malaysia
61	18-Mar	MFG	ID_0127	Mohammad Yeakub	Ali	International Islamic University Malaysia
62	18-Mar	AU	ID_0128	Saiful Anuar	Abu Bakar	Universiti Teknologi Malaysia
63	6-Apr	ME	ID_0130	Farshad	Akhlaghi	Islamic Azad University - South Tehran Branch
64	9-Apr	HFT	ID_0132	Md.	Hasanuzzaman	Universiti Malaya
65	18-Mar	ME	ID_0139	Mohammad Sukri	Mustapa	Nagoaka University of Technology
66	18-Mar	HFT	ID_0141	Aman Mohd Ihsan	Bin Mamat	Universiti Teknologi MARA
67	18-Mar	MFG	ID_0143	Mohd Fadzli	Abdollah	Universiti Teknikal Malaysia Melaka

ICME 2008 Confirmed Participants [5th May 2008]

Num:	Date:	Category:	ID No:	First Name:	Last Name:	Institution/Organization:
68	31-Mar	ME	ID_0145	Mohd Sazli	Saad	Universiti Malaysia Perlis
69	28-Mar	HFT	ID_0147	Wisnoe	Wirachman	Universiti Teknologi MARA
70	18-Mar	HFT	ID_0150	Vivien Suphandani	Djanali	Sepuluh Nopember Institute of Technology
71	8-Apr	HFT	ID_0151	Yagnesh	Sharma	Manipal Institute of Technology
72	3-Apr	MFG	ID_0152	Vasudeva	Karanth	Manipal Institute of Technology
73	3-Apr	ME	ID_0153	Hamimah	Abd Rahman	Universiti Tun Hussein Onn Malaysia
74	18-Mar	MFG	ID_0155	Sukarnur	Che Abdullah	Universiti Teknologi MARA
75	18-Mar	IE	ID_0156	Hidehiko	Yamamoto	Gifu University
76	18-Mar	IE	ID_0156	Rizauddin	Ramli	Universiti Kebangsaan Malaysia
77	11-Apr	ME	ID_0160	Izhan	Abdullah	Universiti Kebangsaan Malaysia
78	18-Mar	ME	ID_0161	Ahmad Hussein	Abdul Hamid	Universiti Teknologi MARA
79	18-Mar	ME	ID_0164	Yuli	Panca Asmara	Universiti Teknologi PETRONAS
80	18-Mar	MFG	ID_0169	Dzullijah	Ibrahim	Universiti Teknologi MARA
81	18-Mar	IE	ID_0172	Norhayati	Zakuan	Universiti Tun Hussein Onn Malaysia
82	18-Mar	IE	ID_0173	Kuan Yew	Wong	Universiti Teknologi Malaysia
83	18-Mar	ME	ID_0175	Yusli	Yaakob	Universiti Teknologi MARA
84	30-Mar	MFG	ID_0176	Ali Akbari	Akbari	Ferdowsi University of Mashhad
85	9-Apr	HFT	ID_0178	Md.	Hasanuzzaman	Universiti Malaya
86	30-Mar	AU	ID_0179	Swami Nathan	Subramanian	Indian Institute of Technology Madras
87	18-Mar	ME	ID_0182	Joga	Setiawan	Universiti Teknikal Malaysia Melaka
88	18-Mar	ME	ID_0185	Mochamad	Safarudin	Universiti Teknikal Malaysia Melaka
89	18-Mar	IE	ID_0190	Kuan Yew	Wong	Universiti Teknologi Malaysia
90	19-Mar	ME	ID_0201	Kannachai	Kanlayasiri	King Mongkut's Institute of Technology Ladkrabang
91	18-Mar	ME	ID_0202	Kengkamon	Wiratkasem	King Mongkut's University of Technology North Bangkok
92	2-Apr	MFG	ID_0207	Mahshuri	Yusof	Universiti Malaysia Sarawak
93	18-Mar	IE	ID_0209	Shivraj	Yeole	VNR Vignana Jyothi Institute of Engineering & Technology
94	7-Apr	AU	ID_0219	Zaliha	Wahid	Universiti Kebangsaan Malaysia
95	11-Apr	AU	ID_0221	Moreshwar	Khodke	Vishwakarma Institute of Technology
96	28-Mar	MFG	ID_0222	Seok-Jae	Ha	Inha University
97	18-Mar	ME	ID_0225	Esmaeil	Poursaeidi	Zanjan University
98	24-Mar	HFT	ID_0227	Harun	Rosyid	University of Indonesia
99	28-Mar	MFG	ID_0228	Du-Seong	Jeon	University of Incheon
100	28-Mar	MFG	ID_0229	Kwang-Pyo	Hong	Inha University
101	18-Mar	HFT	ID_0231	Herman	Sasongko	Sepuluh Nopember Institute of Technology
102	18-Mar	ME	ID_0232	Esmaeil	Poursaeidi	Zanjan University
103	31-Mar	MFG	ID_0233	Nima	Zarif Yussefian	Ferdowsi University of Mashhad
104	18-Mar	ME	ID_0234	Maizirwan	Mel	International Islamic University Malaysia
105	30-Mar	HFT	ID_0237	Ali Reza	Tevmourtash	Ferdowsi University of Mashhad
106	30-Mar	HFT	ID_0237	Seyyed Mohammad Sobhan	Nabavi	Ferdowsi University of Mashhad
107	28-Mar	MFG	ID_0239	Dariush	Ghaffari Tari	Amirkabir University of Technology
108	28-Mar	MFG	ID_0240	Dariush	Ghaffari Tari	Amirkabir University of Technology
109	16-Apr	ME	ID_0249	Khalil	Farhangdoost	Ferdowsi University of Mashhad
110	18-Mar	HFT	ID_0258	Ibrahim Shehu	Diso	Kano State University of Technology
111	18-Mar	HFT	ID_0258	Yoo Aondona	Ali	Brunei Shell Pet. Sdn. Bhd.
112	21-Mar	ME	ID_0271	Ahmad Mujahid	Ahmad Zaidi	Universiti Tun Hussein Onn Malaysia
113	28-Mar	ME	ID_0297	Md. Tarekul	Alam	Bangladesh University of Engineering and Technology
114	21-Mar	ME	ID_0298	Wahyudi	Martono	International Islamic University Malaysia
115	28-Mar	ME	ID_0298	Wali	Ahmad	International Islamic University Malaysia
116	24-Mar	ME	ID_0312	Lokman	Abdullah	Universiti Teknikal Malaysia Melaka
117	16-Apr	MFG	ID_0316	Malcolm	Taylor	University of Canterbury
118	18-Mar	IE	ID_0320	Mohd Hisham	Nordin	Universiti Teknikal Malaysia Melaka
119	18-Mar	AU	ID_0324	Awang	Idris	Universiti Kuala Lumpur - Malaysian Spanish Institute
120	18-Mar	HFT	ID_0325	Mohamad Shaiful Ashrul	Ishak	Universiti Malaysia Perlis
121	18-Mar	IE	ID_0326	Mohammad Darahim	Ibrahim	Universiti Kebangsaan Malaysia
122	18-Mar	ME	ID_0329	Nitesh	Yelve	Fr. C. Rodrigues Institute of Technology, Vashi
123	18-Mar	MFG	ID_0332	Siti Zaleha	Wahid	Universiti Kebangsaan Malaysia
124	18-Mar	ME	ID_0335	Farshad	Akhlaghi	Islamic Azad University - South Tehran Branch
125	18-Mar	ME	ID_0336	Charlie	Sia Chin Voon	Universiti Malaysia Sarawak
126	18-Mar	IE	ID_0339	Rohana	Abdullah	Universiti Teknikal Malaysia Melaka
127	3-Apr	MFG	ID_0341	Zurlinda Asma	Aziz	Universiti Kebangsaan Malaysia
128	18-Mar	ME	ID_0342	S.M.	Sapuan	Universiti Putra Malaysia
129	16-Apr	MFG	ID_0343	Ngu	Sze Song	Universiti Malaysia Sarawak
130	18-Mar	ME	ID_0344	Sumon	Saha	Bangladesh University of Engineering and Technology
131	9-Apr	HFT	ID_0345	Choung Jung	Chai	Universiti Malaysia Sarawak
132	18-Apr	ME	ID_0346	Mohd Azmir	Mohd Azhari	Universiti Malaysia Pahang
133	18-Mar	ME	ID_0347	Kho	Lee Chin	Universiti Malaysia Sarawak
134	9-Apr	HFT	ID_0348	Mohd Faizal	Mohideen Batcha	Universiti Tun Hussein Onn Malaysia

ICME 2008 Confirmed Participants [5th May 2008]

Num:	Date:	Category:	ID No:	First Name:	Last Name:	Institution/Organization:
135	18-Mar	HFT	ID_0349	Shaharin	Sulaiman	Universiti Teknologi PETRONAS
136	18-Mar	ME	ID_0350	Abu Bakar	Musa	Universiti Tenaga Nasional
137	18-Mar	IE	ID_0352	Norliana	Mohd Abas	Universiti Teknologi MARA
138	18-Mar	ME	ID_0355	Ahmad Mujahid	Ahmad Zaidi	Universiti Tun Hussein Onn Malaysia
139	18-Mar	HFT	ID_0356	Waiel Kamal	ElSaied	Universiti Teknologi PETRONAS
140	18-Mar	ME	ID_0358	Azian	Hariri	Universiti Tun Hussein Onn Malaysia
141	18-Mar	ME	ID_0359	Yusliza	Yusof	International Islamic University Malaysia
142	18-Mar	ME	ID_0360	Susilo	Widyanto	Gadjah Mada University
143	18-Mar	HFT	ID_0362	Kausalyah	Venkatason	Universiti Teknologi MARA
144	18-Mar	HFT	ID_0363	Hun Shen	Thye	Universiti Malaysia Sarawak
145	18-Mar	ME	ID_0366	Zamri	Omar	RMIT University
146	10-Apr	MFG	ID_0376	Mohamad Faizal	Abdullah	Universiti Kebangsaan Malaysia
147	18-Mar	IE	ID_0377	D'oria Islamiah	Rosli	Universiti Malaysia Sarawak
148	31-Mar	ME	ID_0389	Mostafa	Badakhshian	Universiti Putra Malaysia
149	7-Apr	ME	ID_0390	Puji	Untoro	Badan Tenaga Nuklir
150	31-Mar	ME	ID_0391	Sofian	Mohd	Universiti Tun Hussein Onn Malaysia
151	10-Apr	ME	ID_0392	Mohd Fahrul	Hassan	Universiti Tun Hussein Onn Malaysia
152	9-Apr	MFG	ID_0393	Freddawati	Rashiddy Wong	Universiti Teknologi Malaysia
153	9-Apr	MFG	ID_0394	Amrifan Saladin	Mohruni	Universiti Teknologi Malaysia
154	21-Apr	HFT	ID_0395	Safiah	Othman	Universiti Tun Hussein Onn Malaysia
155	21-Apr	HFT	ID_0396	Safiah	Othman	Universiti Tun Hussein Onn Malaysia
156	17-Apr	HFT	ID_0398	Winardi	Sani	Universiti Tun Hussein Onn Malaysia
157	23-Apr	ME	ID_0399	Shahruddin	Mahzan@Mohd Zin	Universiti Tun Hussein Onn Malaysia
158	18-Mar	DE	ID_0401	Zuraida	Ahmad	International Islamic University Malaysia
159	18-Mar	DE	ID_0402	Norani	Nordin	Universiti Kebangsaan Malaysia
160	18-Mar	DE	ID_0403	Yasuhiro	Okamoto	Okayama University
161	18-Mar	DE	ID_0404	Nurul Ain	Mohd Azmi	
162	18-Mar	DE	ID_0405	Mohd Mahadzir	Mohammud @ Mahmood	Universiti Sains Malaysia
163	4-Apr	DE	ID_0406	Hasnida	Abdul Samat	Universiti Sains Malaysia
164	25-Apr	DE	ID_0407	Marla	Tanimoto	Goodrich
165	29-Apr	DE	ID_0408	Mohd Muhsein	Taib	Universiti Tun Hussein Onn Malaysia
166		AU	ID_0112	*Pending*		
167		ME	ID_0340	*Pending*		
168		ME	ID_0397	*Pending*		

[MFG] Manufacturing

ID TITLEAUTHOR1MFGStudy of Surface Roughness on Induction Hardened Steel using CBN Cutting ToolSivaprakasam Thamizhmanii4MFGControl of Blank Holder Force to Eliminate Wrinkling and Fracture in Deep-Drawing Rectangle PartsVenkat Reddy Ragireddy6MFGImplementation of Toyota Production System (TPS) in the Production Line of a Local Automotive Parts ManufacturerNorazmein Abdul Raman9MFGANALYSIS OF VARIANCE OF THE METAL INJECTION MOLDING PARAMETER USING A BIMODAL PARTICLE SIZE DISTRIBUTION FEEDSTOCK Khairur Rijal Jamaludin11MFGEFFECT OF CRYOGENIC COOLING DURING GRINDING OF MILD STEEL AND STAINLESS STEELAhsan Khan13MFGTraveling Salesman Problem with Precedence Constraint for Manufacturing Application: A ReviewMohd Fadzil Faisae Ab. Rashid20MFGStrain rate and temperature dependence of mechanical properties and microstructure of biomedical titanium alloy Woei-Shyan Lee27MFGTemperature Distribution and Bending Characteristics in Plastics Laser FormingZazuli Mohid28MFGEFFECT OF ELECTRODE COOLING ON THE ELECTRICAL DISCHARGE MACHINING OF TITANIUM ALLOYSuleiman Abdulkareem52MFGOptimal Lot Size of EPQ Model Considering Imperfect and Defective Products Mohammad Reza Shahraki54MFGSimulation based Control System for a Flat Screen Monitor Remanufacturing SystemAzrul Azwan Abdul Rahman67MFGScaling effects in milling operations of tungsten-copper-compositesMatthias Graf von der Schulenburg71MFGA Study on Surface Roughness of an RP Part Fabricated on Stereolithography ApparatusAzwan Iskandar Azmi78MFGA Study on FDM Machine Using DOE Technique In Terms of Dimensional AccuracyMuhamad Nasir Murad83MFGDesign and Manufacturing of a Spherical Rolling RobotHashem Ghariblu87MFGThe effect of nodularisation parameters on the quality of ductile ironMohd Rashidi Maarof89MFGDevelopment of an Artificial Neural Network Algorithm for Predicting the Cutting Forces in End Milling of Inconel 718 Alloy Mohammad Ishtiyaq Hossain94MFGMathematical Model of chip Serration frequency in end milling of Inconel 718Md. Anayet Ullah Patwari98MFGPotential application of Rapid Prototyping techniques to fabricate a Laminated Rapid Tooling of PU Foam MouldDr Ahmad Majdi Abdul Rani125MFGInfluence of Micro End Milling Process Parameters on Surface RoughnessMohammad Yeakub Ali127MFGFabrication of Micromold Cavity for MicroreplicationMohammad Yeakub Ali143MFGDesign of an aluminum alloy side door impact beam for passenger carsMohd Fadzli Abdollah152MFGThe Effect of Radial Clearance between Impeller-Diffuser on Design Point Operation in a Centrifugal FanVasudeva Karanth155MFGAUTOMOTIVE PART PROTOTYPE DEVELOPMENT USING REVERSE ENGINEERING TECHNOLOGYSgbrarnur Che Abdullah169MFGIntegrating STEP-NC with a PC-based open architecture controller (OAPC-NC) for a milling process.Dzullijah Ibrahim176MFGDesign of A Reliable Stair Climbing Tracked RobotAli Akbar Akbari193MFGProcessing and properties of PA6/MMT clay nanocomposites produced using selective laser sinteringMd Saidin Wahab207MFGShear Deformation of Non-Crimp FabricsMahshuri Yusof222MFGA Web-based Real-time Mould Machining Process Tracking SystemMYSeong-Woo Cho228MFGA Study of Machining Error Compensation for Micro End-milling Tae Il Seo229MFGDevelopment of a Micro Tool Inspection and Verification SystemMYSeong-Woo Cho233MFGCutting Force Simulation of Nose Radius Oblique ToolsBehnam Moetakef Imani239MFGOptimum hydroforming preform Shape design by shape sensitivity analysisDariush Ghaffari Tari240MFGAn investigation of process parameters on quality of X-shape hydroformed joint by design of experiment and finite element methodDariush Ghaffari Tari316MFGSemi-automated Robotic Sculpting of Freeform Surfaces for Direct Digital ManufactureM.G. Taylor332MFGThe EWR of graphite and copper electrodes in electrical discharge machining (EDM) of AISI H13 harden steelJaharah A.Ghani341MFGA Study of Wire Looping Formation to Improve Ball Neck Strength of Wire Bonding ProcessZ. A. Aziz343MFGModeling of General Etching System in Wafer FabricationS.S. Ngu376MFGA study of oxidized leadframe for QFN package on the cyclic test variable temperature effectMohamad Faizal Abdullah393MFGThe Effect of Drill Point Geometry and Drilling Technique on Tool Life when Drilling Titanium Alloy, Ti-6Al-4VKamarudin Kamdani394MFGMathematical Modeling of Cutting Force in End Milling Ti-6Al4V using TiAlN Coated Carbide Tools
Amrifan Saladin Mohruni

Design of a Reliable Stair Climbing Tracked Robot

A.A. Akbari [1,*], A. Dashkhaneh[1]

[1]Faculty of Engineering, Ferdowsi University of Mashhad,
Mashhad, Iran

* akbari@um.ac.ir

Abstract:

In this paper, a new designed and manufactured tracked mobile robot is illustrated. This robot may be used as a mean of transportation for disabled people and load carrying machine due to a safe and smooth motion on the stairs. The present robot mechanism is based on combination of stair climber wheeled and tracked robot, and benefits the advantages of both mechanisms.

The new mechanism structure, increases the contact area of robot with the stair surfaces, hence decreases the probability of slip on the stairs. The robot can ascend the stairs properly as a result of higher safety on the stairs. The present paper focuses on several design aspects such as main idea, stair climbing style, stability, safety and smooth motion considerations.

1. Introduction

Nowadays, with the fast development of robotic applications in human life, mobile robots are going to be used in urban areas more and more. Therefore they should overcome different obstacles such as stairs and single steps. Up to now, many robots with different structures are proposed that can climb stairs successfully. Shrimp rover [1], MSRox [2] and RHex [3], are examples of wheeled and legged robots that can climb stairs. Moreover there are some other tracked robots with the ability of stair climbing [4-5]. However there are a few robots with the ability of carrying load while climbing stairs. The robots with the ability of carrying loads around 100kg can be tailored as a powered wheelchair or load carrying robot. The iBOT 4000 [6] with the high level of autonomy is an example of a wheeled wheelchair. It has some interesting abilities including stair climbing and descending. The wheelchair uses the four wheels rotation about their axis to climb stairs. The KSC-A-11 [7] is a dual section tracked wheelchair that can climb stairs. An active control of the pivot angle between two tracks helps the wheelchair to start and end climbing stairs and keep itself in a balanced condition.

TopChair [8] is a compact wheeled-tracked wheelchair that moves on the level ground on the wheels, and uses a single track structure to ascend and descend stairs. The wheels help single track to start and end stair climbing. Table 1 gives some specifications of the mentioned wheelchairs.

Based on the table 1 we notice that the tracked wheelchairs have a smooth and continuous motion on the stairs while the wheeled one has an uneven and discontinuous motion. In addition the control of the tracked wheelchairs is simpler than the wheeled one. However the major drawback of tracked wheelchairs is unreliable contact area with the stairs because they only contact with the edge of the stairs.

Table 1 three wheelchairs specification

	advantages	disadvantages
iBOT 4000	compact, multifunctional, safe contact area with the stairs,	uneven and discontinuous stair climbing, the passenger or an assistance must balance the wheelchair while climbing
KSC-A-11	smooth and continuous motion on the stairs, simple control	low speed unreliable contact area with the stairs
Top-Chair	compact smooth and continuous stair climbing , needs no assistance for climbing stairs, simple control	small and unreliable contact area with the stairs, the wheels should help the single track to start and end stair climbing

In This paper we present a new mechanism for a single tracked robot with the ability of load carrying that increases the contact area with the stairs. As a result the robot can climb stairs safely. In addition the mechanism is able to start and end climbing stairs without any additional track or wheels.

2. Main idea

Side view of the designed mechanism of robot is illustrated in Fig.1 that is composed of eight wheels, two motors, two storing mechanisms for tracks, and two tracks. The wheels are connected to the body via jointed links and their position can be adjusted about the body. The mechanism is designed so that allows all wheels to keep their contact with the ground in an uneven terrain (Fig.1). To provide additional length for tracks while the robot passes an uneven surface, there are two Storing mechanisms. Long and pre-tensioned springs in the Storing mechanisms provide constant force for tracks. The robot only needs two motors to drive tracks and the whole mechanism.

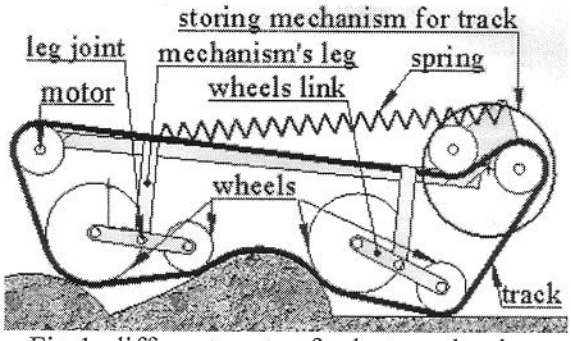

Fig.1. different parts of robot mechanism

3. Stair climbing style

In this section we define a method for climbing stairs that can result a safe and stable motion for mechanism and simplifies the design process. The method consists of four steps to climb one stair. Fig.2 shows different steps of this method.

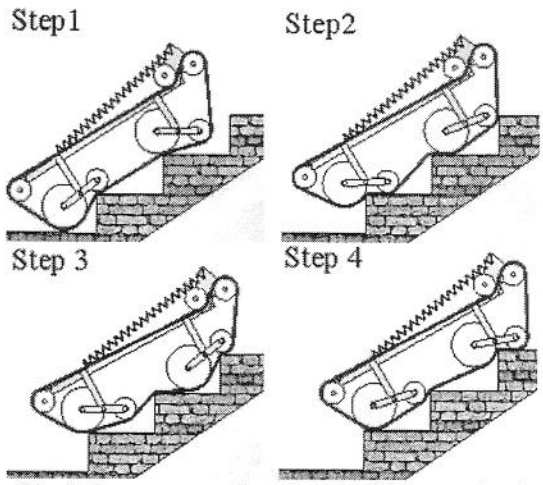

Fig.2 four steps of stair climbing method

This method has some attributes as discussed bellow:

First: in all steps, at least two wheels of each side of mechanism are in contact with the

stairs. In consequence the robot motion will be reliable.

Second: The robot is always in contact with two stairs so is stable on the stairs.

Third: the rear leg of the mechanism follows the front leg configuration with six steps delay. As a result the robot legs distance can be found.

Forth: each wheel comes back into the initial situation after four steps.

4. Detailed Design

The stair climbing method as discussed in the previous section can guarantee the safe and stable motion on the stairs. In this section detailed design of mechanism dimensions is performed to satisfy the stair climbing style and smooth stair climbing.

5.1. Wheels radiuses and distances in legs

Fig.3 shows a detailed view of robot's rear leg in step 1 of motion. This situation is also similar to the front leg situation in step 3.

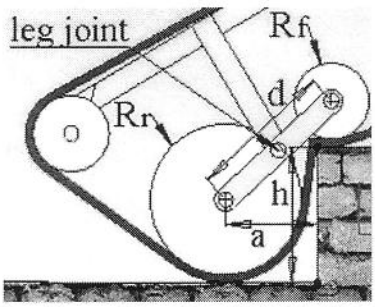

Fig. 3 rear leg situation in step 1

Based on the discussed method of stair climbing, front wheel seats on the stair before the rear wheel leaves the previous stair. Hence the relation between the component's dimensions can be determined as below:

$$\sqrt{(h-(R_r-R_f))^2+(a)^2}=d \qquad (1)$$

Where h is the stair height, R_r and R_f are rear and front wheels radiuses, d is the wheels link length, and a is a distance when the rear wheel leaves the stair. In this equation a is a parameter dependent to the wheels path and can be adjusted by the tension of tracks. So we can choose it based on our desire. As a result there are 3 independent parameters and only one equation. We can choose R_r & R_f independently and calculate d from the equation 1. We use our choice to choose R_r & R_f to achieve a smooth motion for the robot legs on a common stair with the width of 30cm and height of 18 cm. To do that, at first we should define some constraints for wheels dimensions and then use an optimization program to achieve the most smooth motion for robot's leg joint.

5.2. Wheels radiuses constraints

To achieve a simple structure and compact dimensions for robot, the wheels radiuses should be limited to values as bellow:

1- A wheel radius should be kept in a proper bound, based on the similar robots radiuses as: $3cm \le R_r, R_f \le 12cm$

2- To reduce the length of d based on equation 1 there should be: $R_f \le R_r$

3- For more simplicity in the structure of robot, there should be: $R_r + R_f < d$

5.3. Wheels path

To find a smooth path for leg joints we need to have a path for wheels. Although there are analytical or software based models to find exact path of wheels on the stairs, the problem is that we need all dimensions known before. Therefore an estimated path for wheels based on the method of climbing stairs is offered. From the method we know that the wheels move about half of its path on the stair surface and then leave the stair to go to the next stair. Estimated path with the details is shown in the Fig. 4.

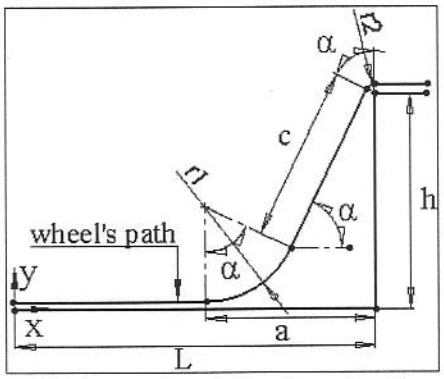

Fig. 4 Estimated path for the wheels on the stair

The selected values for the parameters shown in the Fig. 4 are: a=14cm, r_1=12cm, α=80.5°, c=7.14cm, r_2=1cm. Now we can find the path of wheel's center as shown in the Fig. 5

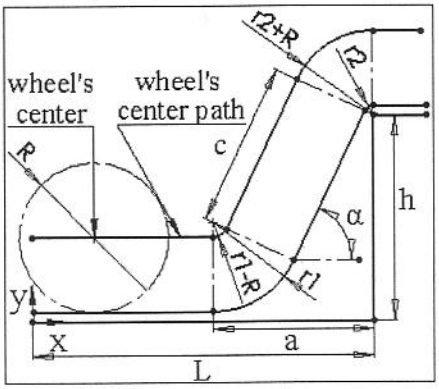

Fig. 5 wheel's center path on the stairs

5.4. The optimized path

Fig. 6 shows a path for the leg joint on the stair that is obtained for certain values of R_r & R_f and d obtained from equation 1. In this figure L_1 & L_2 are two arbitrary lines that are drawn with the angle of θ due to horizon and surround the leg joint path. In the figure, θ is the stairs slope angle. We define S as the minimum distance of these two lines. If we find S for all allowable values of R_r & R_f, then the smoothest path could be found for the minimum value of S. The results of optimization are found as the following: R_r=9.6cm, R_f=4.9cm, d =19.3cm and S =2.85cm

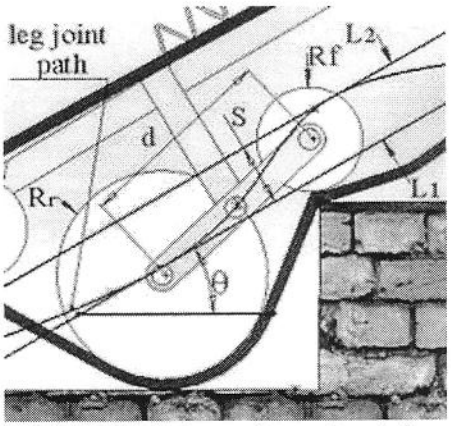

Fig.6. leg joint path on the stair

5.5. Legs distance

Based on the style of stair climbing, rear leg will arrive to the front leg situation after six steps. Because the robot moves in each step one fourth of stair, legs distance can be obtained as bellow:

$$D = 6 \times \frac{1}{4}\sqrt{L^2 + h^2} = 52.5cm \qquad (2)$$

In this equation D is the distance between legs. Now we can draw the leg joint and the geometric center of robot path, as shown in Fig. 7.

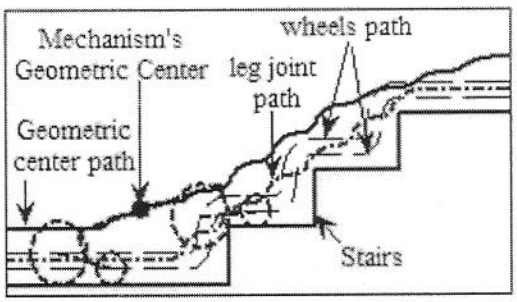

Fig. 7 the path of geometric center of robot

6. Test Results

The robot is manufactured and tested in different situations. Fig.8 shows the robot while climbing stairs. Also Fig.9 shows the mechanism while climbing a step with 25cm

height. As can be seen in the pictures, the mechanism can easily change its situation from level ground motion to stair climbing mode and vice versa. The mechanism has also shown its capability to move on an uneven ground, ascend slopes up to 40° and climb stairs while carrying a load about 80 kilograms. Table 1 shows the general information of mechanism obtained from test and measurement.

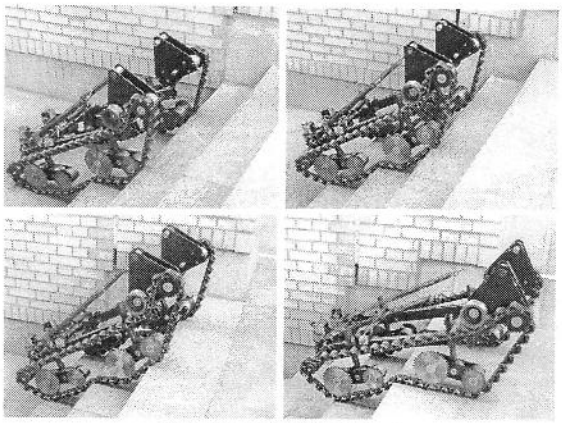

Fig.8 stair climbing

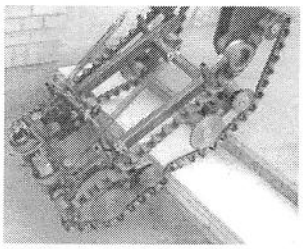

Fig.9 climbing 25cm height step

Table1. Specification of model

specification	measures
length, width, height	95*55*50 cm
weight	60kg
Max. height for single step	25cm
Max. slope for stairs	31 degrees
No. of Motors	2 AC motors
Max. Stair climbing speed	20 stairs/min.
Passenger traveling speed	10 stairs/min.
Total weight capacity	100kg

7. Conclusions

In this paper, a new designed and manufactured single tracked robot is explained. The test results shows that it has a smooth, reliable and time continues motion on the stairs. In addition it can easily start and finish climbing stairs.

References

[1] T. Estier, Y. Crausaz, B. Merminod, M. Lauria, R.Piguet, R. Siegwart, "An innovative Space Rover with Extended Climbing Abilities", *Proceedings of Space and Robotics 2000, Albuquerque, USA, February 27-March 2, 2000.*

[2] M.M. Dalvand, M.M. Moghadam, "Stair Climber Smart Mobile Robot (MSRox)", *Autonomous Robots*, 20, pp. 3–14, Feb 2006.

[3] E.Z. Moore, D. Campbell, F. Grimminger and M. Buehler, "Reliable Stair Climbing in the Simple Hexapod 'RHex'", *IEEE Int. Conf. on Robotics and Automation (ICRA), Washington DC, USA., May* 2002, pp. 2222-2227.

[4] A.I. Mourikis, N. Trawny, S.I. Roumeliotis, D. M. Helmick, L. Matthies, "Autonomous Stair Climbing for Tracked Vehicles", *The International Journal of Robotics Research*, 26, No. 7,pp. 737-758, 2007.

[5] D.M. Helmick1, S.I. Roumeliotis, M.C. McHenry, L. Matthies, "Multi-Sensor, High Speed Autonomous Stair Climbing", *IEEE/RSJ International Conference on Intelligent Robots and System*, 2002, pp. 733- 742,

[6] The INDEPENDENCE® iBOT® 4000 Mobility System, Home Page, Web: http://www.ibotnow.com

[7] T. Ishimatsu, K. Sugiyama, M. Kurihara, "Development of a stairclimbing machine in Nagasaki", *Proc. 3rd International Workshop of Advanced Mechatronics*, Kanwon, Korea, 214-217, 1999

[8]TopChair, The stair climbing wheelchair, Home Page, Web: http://pagesperso-orange.fr/topchair/index_en.htm