2010 SIAM ANNUAL MEETING (AN10)
JULY 12-16, 2010
PITTSBURG, PENNSYLVANIA, U.S.A.

AN ANALYTICAL SOLUTION OF FLOW BETWEEN TWO ROTATING SPHERES WITH TIME-DEPENDENT ANGULAR VELOCITIES

Asghar Baradaran Rahimi *

Faculty of Engineering, Ferdowsi Univ. of Mashhad, P.O. Box No. 91775-1111, Mashhad, Iran (Corresponding Author. E-mail: rahimiab@yahoo.com)

ABSTRACT

This research involves the study of an incompressible, Newtonian fluid flow between two concentric, rotating spheres with time-dependent angular velocities. The main purpose of the research is to study the use of an approximate analytical method for analyzing the transient motion of the fluid in the annulus. The governing equations are linearized by employing perturbation techniques. Then the meridional dependence in these equations is removed by expanding the dependent variables in a series of Gegenbauer functions with variable coefficients and using the orthogonality property of these functions. The equations for the variables coefficients are solved by separation of variables and Laplace transform methods. Results of the flow dynamics are presented for various Reynolds numbers up to 100. The results are presented for constant and time-dependent angular velocities.

1- INTRODUCTION

The motion of a viscous incompressible fluid in a spherical annulus between two concentric spheres rotating about a common axis with arbitrary angular velocities has been the subject of extensive researches in various fields of engineering such as meteorology and geophysics. Proudman [1], Stewartson [2], Carrier [3], Haberman [4], Munson & Joseph [5], Howarth [6], Lord and Bowman [7], and Fox [8] obtained an approximate analytical solution to the problem involving the flow in an annulus between two spheres rotating with prescribed constant angular velocities. Pedlosky [9] extended the problem to include temperature effects. Dennis & Singh [10] solved this problem by employing a quasi-analytical method. Greenspan [11], Schultz & Greenspan [12] solved this problem by employing numerical methods. Pearson [13], and Krause & Bartels [14] employed the finite-difference method to obtain a solution to the transient problem for the case where one of the spheres is suddenly rotated and then held at a prescribed constant angular velocity. Thermal convection in rotating spherical annuli has been considered by Douglass et al. [15]. A study of viscous flow in oscillatory spherical annuli has been done by Munson and Douglass [16]. Gagliardi et al. [17] solved the problem by an approximate analytical method for the cases of constant a ngular velocity and constant torque. This work involves the study of the steady state and transient motion of a system consisting of an incompressible, Newtonian fluid in an annulus between two concentric, rotating, rigid spheres. The primary purpose of their research was to study the use of an approximate analytical method for analyzing the transient motion of the fluid in the annulus between spheres, which are suddenly started and to compare the results with those of Yang et al. [18] and Ni and Negro [19]. These problems include the case where one or both spheres rotate with prescribed constant angular velocities and the case in which one sphere rotates due to the action of an applied constant or impulsive torque. A numerical study of flow and heat transfer between two rotating spheres with time-dependent angular velocities has been done by Jabari Moghadam and Rahimi [20]. Also a similarity solution in study of flow and heat transfer between two rotating spheres with constant angular velocities has been done by Jabari Moghadam and Rahimi [21].

In this paper, an analytical solution for the time-dependent angular velocity case is of interest. The equations of motion are expressed in terms of a stream function (ψ) and a circumferential function (Ω), and then linearized for small values of Reynolds number by use of a perturbation technique. The dependence of ψ and Ω on the meridional coordinate θ is removed by expanding

The dependent variables in a series of Gegenbauer functions with variable coefficients and employing the orthogonality property of these functions. The resulting equations of the zeroth-order and higher-order approximations are then solved by using the Laplace transform and the separation of variables methods, respectively.

2- MATHEMATICAL MODEL

The problem herein consists of an incompressible, Newtonian fluid contained in an annulus between two concentric rotating rigid spheres (see Fig. 1). The inner and outer radii of the annulus are R_i and R_o, respectively. The spheres are rotating about a common axis, and because of the axially-symmetric situation, the flow is independent of the coordinate ϕ.

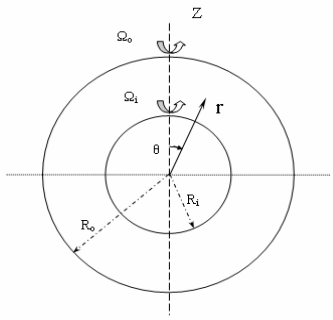

Fig. 1: The flow geometry

The fluid velocity components in the direction of the spherical coordinates r, θ, and ϕ are given as V_r, V_θ, and V_ϕ, respectively. These components are related to the stream function (ψ) and circumferential function (Ω) as:

$$V_r = \frac{1}{r^2 \sin\theta}\frac{\partial\psi}{\partial\theta} \quad , \quad V_\theta = \frac{-1}{r\sin\theta}\frac{\partial\psi}{\partial r} \quad , \quad V_\phi = \frac{\Omega}{r\sin\theta} \tag{1}$$

Hence, the governing equations in terms of ψ and Ω are written as:

$$\frac{\partial\Omega}{\partial t} + \frac{\psi_\theta\Omega_r - \psi_r\Omega_\theta}{r^2\sin\theta} = \nu D^2\Omega \tag{2}$$

and

$$\frac{\partial\left(D^2\psi\right)}{\partial t} + 2\frac{\Omega}{r^3\sin^2\theta}\left(\Omega_r r\cos\theta - \Omega_\theta\sin\theta\right) + \frac{1}{r^2\sin\theta}\left[\psi_\theta\left(D^2\psi\right)_r - \psi_r\left(D^2\psi\right)_\theta\right] + 2\frac{D^2\psi}{r^3\sin^2\theta}\left(\psi_r r\cos\theta - \psi_\theta\sin\theta\right) = \nu D^4\psi \tag{3}$$

Now by introducing the following non-dimensional parameters,

$$\Omega^* = \frac{\Omega}{r_0^2 \omega_0} \quad , \quad \psi^* = \frac{\psi}{r_0^3 \omega_0} \quad , \quad r^* = \frac{r}{r_0} \quad , \quad t^* = \frac{t\nu}{r_0^2} \tag{4}$$

and setting $x = \cos\theta$, the non-dimensional governing equations are given as :

$$\frac{1}{\mathrm{Re}}\left(D^2 - \frac{\partial}{\partial t}\right)\Omega = \frac{1}{r^2}\left[\psi_r \Omega_x - \psi_x \Omega_r\right] \tag{5}$$

And,

$$\begin{aligned} &\frac{1}{\mathrm{Re}} D^2\left(D^2 - \frac{\partial}{\partial t}\right)\psi = \frac{2\Omega}{r^3}\left[\frac{rx\Omega_r}{1-x^2} + \Omega_x\right] + \\ &\frac{1}{r^2}\left[\psi_r\left(D^2\psi\right)_x - \psi_x\left(D^2\psi\right)_r\right] + \frac{2D^2\psi}{r^3}\left[\frac{rx\psi_r}{1-x^2} + \psi_x\right] \end{aligned} \tag{6}$$

Note that for simplicity, the symbol (*) has been omitted.
Where,

$$\begin{aligned} &\mathrm{Re} = \frac{\omega_0 r_0^2}{\nu} = \text{Reynolds number} \\ &D^2 \equiv \frac{\partial^2}{\partial r^2} + \frac{1-x^2}{r^2}\frac{\partial^2}{\partial x^2}, \qquad r_0 = \textit{reference radius} \\ &\qquad\qquad\qquad\qquad\qquad\qquad \omega_0 = \textit{reference angular velocity} \end{aligned} \tag{7}$$

and the non-dimensional angular velocities of the spheres are defined as follows :

$$\omega_i = \frac{\Omega_i}{\omega_0} \quad \& \quad \omega_o = \frac{\Omega_o}{\omega_0} \tag{8}$$

Note also that for simplicity, $R_1 = r_0$ and $R_2 =$ radius of another sphere, where subscripts q=1, 2 refer to inner and or outer spheres. So, the non-dimensional initial and boundary equations are:

$$\begin{aligned} &\psi(r,x,0) = 0 \\ &\Omega(r,x,0) = 0 \end{aligned} \tag{9}$$

$$\begin{aligned} &\Omega(r,1,t) = 0 \quad , \quad \psi(r,1,t) = 0 \quad , \quad D^2\psi(r,1,t) = 0 \\ &\Omega_x(r,0,t) = 0 \quad , \quad \psi(r,0,t) = 0 \quad , \quad D^2\psi(r,0,t) = 0 \end{aligned} \tag{10}$$

$$\frac{\Omega(R_q,x,t)}{R_q^2\left(1-x^2\right)} = \omega_q \quad , \quad \psi(R_q,x,t) = 0 \quad , \quad \psi_r(R_q,x,t) = 0 \quad , \quad \textit{for} \quad q = 1,2 \tag{11}$$

3- ANALYSIS

3-1 perturbation method

The mathematical model is now linearized for small Reynolds numbers by employing a perturbation method. For this purpose, the dependent variables are expressed as follows:

$$\psi = \sum_{l=1}^{\infty} \mathrm{Re}^l \, \psi^{(l)} \tag{12}$$

$\langle l \equiv odd \rangle$

and

$$\Omega = \sum_{l=0}^{\infty} \mathrm{Re}^{l}\, \Omega^{(l)} \quad , \quad \omega = \sum_{l=0}^{\infty} \mathrm{Re}^{l}\, \omega^{(l)} \tag{13}$$

$\langle l \equiv even \rangle$

Substituting (12) and (13) into (5)- (6) and equating coefficients of like powers of Re, yields

$$\left(D^2 - \frac{\partial}{\partial t} \right) \Omega^{(l)} = \frac{1}{r^2} \sum_{m=0}^{l-2} \left[\psi_r^{(l-m-1)} \Omega_x^{(m)} - \psi_x^{(l-m-1)} \Omega_r^{(m)} \right] \tag{14}$$

$\langle l, m \equiv even \because l - m \geq 2 \rangle$

and

$$D^2 \left(D^2 - \frac{\partial}{\partial t} \right) \psi^{(l)} = \frac{2}{r^3} \sum_{n=0}^{l-1} \left[\Omega^{(l-n-1)} \left(\frac{rx\Omega_r^{(n)}}{1-x^2} + \Omega_x^{(n)} \right) \right]$$

$$+ \frac{1}{r^2} \sum_{m=1}^{l-2} \left[\psi_r^{(l-m-1)} \left(D^2 \psi^{(m)} \right)_x - \psi_x^{(l-m-1)} \left(D^2 \psi^{(m)} \right)_r \right] \tag{15}$$

$$+ \frac{2}{r^3} \sum_{m=1}^{l-2} \left[D^2 \psi^{(l-m-1)} \left(\frac{rx\psi_r^{(m)}}{1-x^2} + \psi_x^{(m)} \right) \right]$$

$\langle l, m \equiv odd \because n \equiv even \because l - m \geq 2 \rangle$

The initial and boundary conditions (9), (10) and (11) become:

$$\begin{aligned} &\psi^{(l)}(r,x,0) = 0 \quad , \quad \langle l \equiv odd \rangle \\ &\Omega^{(l)}(r,x,0) = 0 \quad , \quad \langle l \equiv even \rangle \end{aligned} \tag{16}$$

$$\begin{aligned} &\Omega^{(l)}(r,1,t) = 0 \quad , \quad \psi^{(l)}(r,1,t) = 0 \quad , \quad D^2\psi^{(l)}(r,1,t) = 0 \\ &\Omega_x^{(l)}(r,0,t) = 0 \quad , \quad \psi^{(l)}(r,0,t) = 0 \quad , \quad D^2\psi^{(l)}(r,0,t) = 0 \end{aligned} \tag{17}$$

$$\frac{\Omega^{(l)}(R_q,x,t)}{R_q^2\left(1-x^2\right)} = \delta_{l0}\omega_q^{(l)}, \quad \psi^{(l)}(R_q,x,t) = 0, \quad \psi_r^{(l)}(R_q,x,t) = 0, \quad for\ q = 1,2 \tag{18}$$

$$\left\langle \begin{matrix} l \equiv even & for & \Omega \,\&\, \omega \\ l \equiv odd & for & \psi \end{matrix} \right\rangle, \qquad \text{Note: } \delta_{l0} = \begin{cases} 1 & if \quad l = 0 \\ 0 & if \quad l \neq 0 \end{cases}$$

3-2 separating x-dependence

In this section, it's assumed that the independent variable x can be separated from the variables r and t. Hence the form of $\psi^{(l)}$ & $\Omega^{(l)}$ in the equations (14) and (15) are chosen as follows:

$$\Omega^{(l)} = \sum_{\substack{j=0 \\ even}}^{l} I_{(j+2)}(x)\, f_{(j)}^{(l)}(r,t) \tag{19}$$

$\langle l = 0,2,4,... \rangle$

$$\psi^{(l)} = \sum_{\substack{j=1 \\ odd}}^{l} I_{(j+2)}(x) g_{(j)}^{(l)}(r,t) \tag{20}$$

$\langle l = 1,3,5,... \rangle$,Where,

$$I_{(n)}(x) = n^{th}\ order \quad Gegenbauer \quad function = \frac{-1}{(n-1)!}\left(\frac{d}{dx}\right)^{n-2}\left[\frac{x^2-1}{2}\right]^{n-1} \tag{21}$$

$$for \qquad n = 2,3,4,...$$

The Gegenbauer polynomials generated from (21) satisfy the following orthogonality condition:

$$\int_{-1}^{1} \frac{I_{(m)}(x) I_{(n)}(x)}{(1-x^2)} dx = \begin{cases} \dfrac{2}{n(n-1)(2n-1)} & , \quad m = n \\ 0 & , \quad m \neq n \end{cases} \tag{22}$$

Now by substituting (19) and (20) into (14) and (15), and multiplying the resulting equations by $I_{(k+2)}(x) \big/ (1-x^2)$, then integrating each term in the equations over the region $-1 \le x \le 1$ and applying the orthogonality property defined in (22), one can obtain the governing equation. The conditions imposed on f and g are obtained in the same manner as the following:

$$\begin{aligned} f_{(j)}^{(l)}(r,0) &= 0 \qquad \langle l \equiv even \rangle \\ g_{(j)}^{(l)}(r,0) &= 0 \qquad \langle l \equiv odd \rangle \end{aligned} \tag{23}$$

$$\begin{aligned} &\frac{f_{(j)}^{(l)}(R_q,t)}{2R_q^2} = \omega_q^{(l)} \delta_{l0} \qquad \langle j,l = 0,2,4,... \rangle \\ &g_{(j)}^{(l)}(R_q,t) = g_{(j),r}^{(l)}(R_q,t) = 0 \qquad \langle j,l = 1,3,5,... \rangle \\ &where, \qquad q = 1,2 \end{aligned} \tag{24}$$

3-3 solution of the zeroth-order approximation

The mathematical model for the zeroth-order approximation, $f_{(0)}^{(0)}$, consists of a homogeneous partial differential equation with non-homogeneous boundary conditions. By setting $k = l = 0$ in (23), the form of the partial differential equation is obtained:

$$\left(\frac{\partial^2}{\partial r^2} - \frac{2}{r^2} - \frac{\partial}{\partial t}\right) f_{(0)}^{(0)}(r,t) = 0 \tag{25}$$

The solution to (27) is obtained by employing the Laplace transform method. The general solution of the resulting ordinary differential equation is

$$\bar{f}_{(0)}^{(0)}(r,p) = r^{\frac{1}{2}}\left[AJ_{3/2}(ip^{1/2}r) + BJ_{-3/2}(ip^{1/2}r)\right] \tag{26}$$

Where $J_{-3/2}$ & $J_{3/2}$ are the half-order Bessel functions, and

$$\bar{f}_{(0)}^{(0)}(r,p) = Laplace \quad transform \quad of \quad f_{(0)}^{(0)}(r,t)$$

The boundary conditions are:

$$\bar{f}_{(0)}^{(0)}(r,p) = 2L\left[\omega_1^{(0)}\right] \qquad at \quad r=1$$
$$\bar{f}_{(0)}^{(0)}(r,p) = 2\left(\frac{R_2}{R_1}\right)^2 L\left[\omega_2^{(0)}\right] \qquad at \quad r=\frac{R_2}{R_1} \tag{27}$$

As seen, the form of the angular velocities must be defined. The angular velocities of the spheres are selected as follows:

Case # 1

$$\omega_1^{(0)} = cons\tan t \qquad \& \qquad \omega_2^{(0)} = A_1 e^{\alpha t} \tag{28}$$

Case # 2

$$\omega_1^{(0)} = cons\tan t \qquad \& \qquad \omega_2^{(0)} = A_1 \sin(\alpha t) \tag{29}$$

Case # 3

$$\omega_1^{(0)} = cons\tan t \qquad \& \qquad \omega_2^{(0)} = cons\tan t \tag{30}$$

Where $A_1 \,\&\, \alpha$ are constant values. So the boundary conditions (29) may be written regarding to these cases.

Case #1

$$\bar{f}_{(0)}^{(0)}(r,p) = 2\frac{\omega_1^{(0)}}{p} \qquad at \quad r=1$$
$$\bar{f}_{(0)}^{(0)}(r,p) = 2\left(\frac{R_2}{R_1}\right)^2 \frac{A_1}{p-\alpha} \qquad at \quad r=\frac{R_2}{R_1} \tag{31}$$

Case #2

$$\bar{f}_{(0)}^{(0)}(r,p) = 2\frac{\omega_1^{(0)}}{p} \qquad at \quad r=1$$
$$\bar{f}_{(0)}^{(0)}(r,p) = 2\left(\frac{R_2}{R_1}\right)^2 \frac{A_1\alpha}{p^2+\alpha^2} \qquad at \quad r=\frac{R_2}{R_1} \tag{32}$$

The solution $\bar{f}_{(0)}^{(0)}(r,p)$ has the following general form for all of the case-study problems:

$$\bar{f}_{(0)}^{(0)}(r,p) = \frac{1}{p}\frac{S(p,r)}{Q(p,r)} \tag{33}$$

Equation (36) can be inverted by employing the residue theorem. i.e.,

$$f_{(0)}^{(0)}(r,t) = \sum_{n=0}^{N} \operatorname{Re} s_n\left[e^{pt}\,\bar{f}_{(0)}^{(0)}(r,p)\right] \tag{34}$$

Where N is the total number of poles related to (36).

The specific forms for S and Q for the various cases are available.

4- PRESENTATION OF RESULTS

A computer program was employed to get the required numerical results. Some typical graphs are presented here. Figures 2 and 3 are for constant angular velocities. Figures 4 and 5 are the results of time-dependent angular velocities.

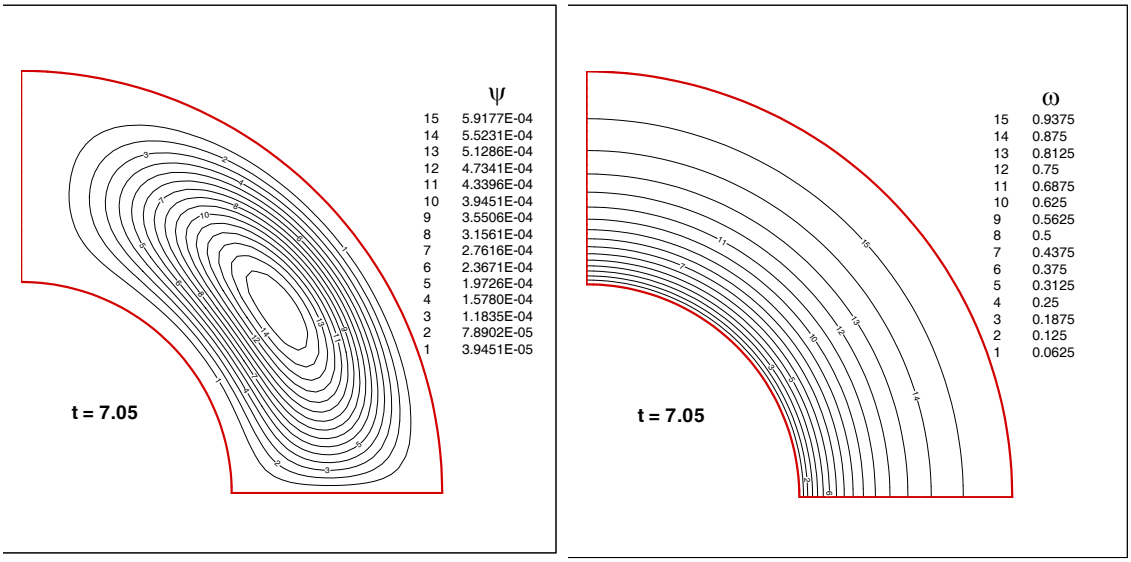

Fig. 2: contours of ψ & ω for Re=10 and $\Omega_{io} = 0$

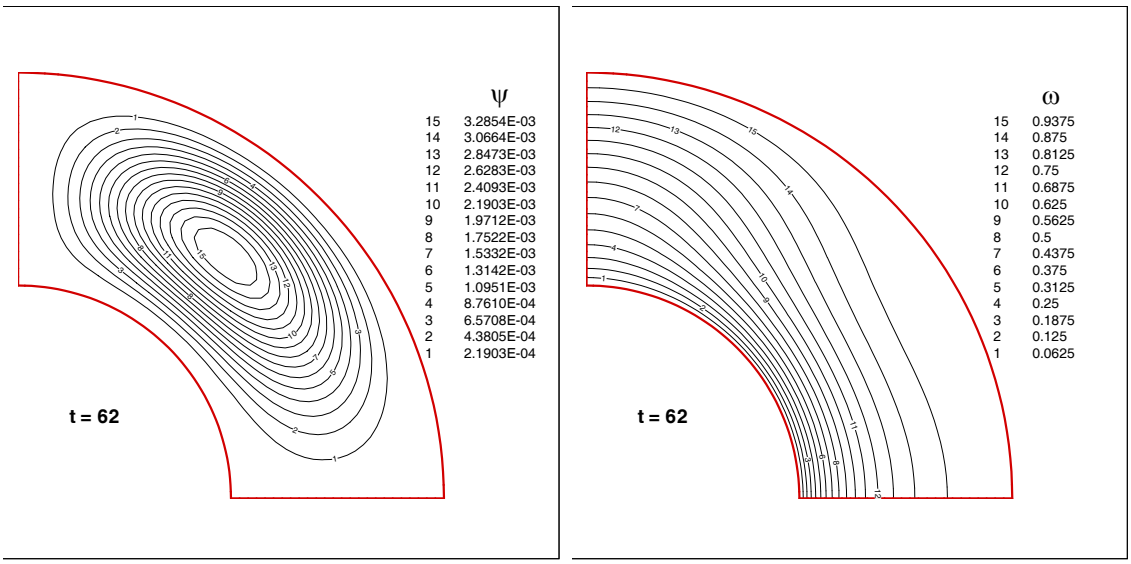

Fig. 3: contours of ψ & ω for Re=100 and $\Omega_{io} = 0$

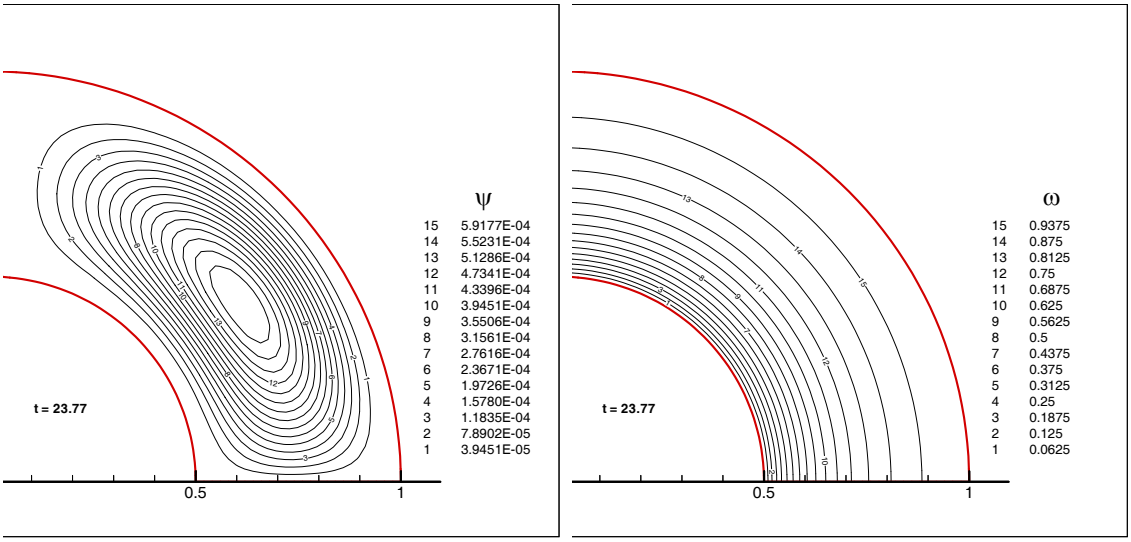

e f

Fig. 4: contours of ψ & ω for Re=10 and $\Omega_{io} = -\exp(1-t)$

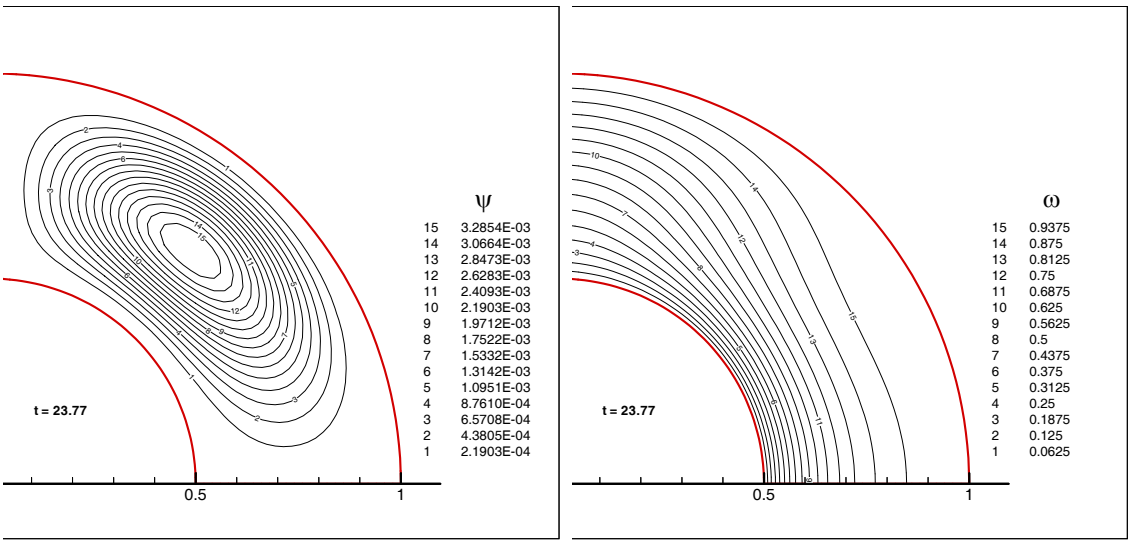

c d

Fig. 5: contours of ψ & ω for Re=100 and $\Omega_{io} = -\exp(1-t)$

5- CONCLUSIONS

The purpose of the research reported in this paper is to study an analytical solution by use of the perturbation method and employing orthogonal Gegenbauer polynomials, to analyze the transient motion of a fluid in a spherical annulus with time-dependent angular velocity. The comparison of the results obtained from this and other investigations indicates that this method can be used satisfactorily for Reynolds numbers less than 100. In these conditions, only few terms are required in the series expansions for Ω & ψ, and hence, the closed-form solution is obtained.

6- REFERENCES

1- Proudman I. "The almost-rigid rotation of viscous fluid between concentric spheres", Journal of Fluid Mechanics, Vol.1, pp. 505-516, 1956

2- K. Stewartson, "On almost rigid rotations. Part 2", J. Fluid Mech., Vol. 26, part 1, pp. 131-144, 1966

3- Carrier G.F., "Some effects of stratification and geometry in rotating fluids", Journal of Mechanics, Vol. 23, pp. 145-172, 1965

4- Haberman W.C., "Secondary flow about a sphere rotating in a viscous liquid inside a coaxially rotating spherical container", Physics of Fluids, Vol. 5, pp.625-626, 1962

5- B.R.Munson and D.D. Joseph, "Viscous incompressible flow between concentric rotating spheres. Part 1. Basic flow", J. Fluid Mech., Vol. 49, part 2, pp. 289-303, 1971

6- Pedlosky J., "Axially symmetric motion of a stratified rotating fluid in spherical annulus of a

7- narrow gap", Journal of Fluid Mechanics, Vol. 36, pp. 401-415, 1969

8- Dennis S.C.R. and Singh S.N., "Calculation of the flow between two rotating spheres by the

9- method of series truncation", Journal of Computational Physics, Vol. 28, pp.297-314, 1978

Greenspan D., "Numerical studies of steady , viscous , incompressible flow between two

10- rotating spheres", Computers and Fluids, Vol. 3, pp. 68-82, 1975

Schultz D. and Greenspan D., "Improved solution of steady, viscous, incompressible flow

11- between two rotating spheres", Computers and Fluids, Vol. 7, pp. 157-163, 1979

Carl E. Pearson, "A numerical study of the time-dependent viscous flow between two

12- rotating spheres", J. Fluid Mech., Vol. 28, Part 2, pp. 323-336, 1967.

Krause E. and Batels F. "Finite difference solution of the Navier-Stokes equations for axially

13- symmetric flows in spherical gaps", Lecture Notes in Mathematics, 771, pp. 313-322, 1979

R.W. Douglass and B.R. Munson and E.J. Shaughnessy, "Thermal convection in rotating

14- spherical annuli-1. Forced Convection", Int. J. Heat Mass Transfer, Vol. 21, pp. 1543-1553, 1978

15- Munson and Douglass J.C. Gagliardi and N.J. Nigro and A.F. Elkouh and J.K. Yang and L. Rodriguez, "Study of the axially symmetric motion of an incompressible viscous fluid between two concentric rotating spheres", Journal of Engineering Mathematics 24: 1-23,

16- 1990

Ali Jabari Moghadam and Asghar B. Rahimi, A Numerical Study of Flow and Heat Transfer Between Two Rotating Spheres With Time-Dependent Angular Velocities, Journal of Heat

18- Transfer-Transaction of ASME, July 2008, pp. 071703-1 – 071703-9.

19- Ali Jabari Moghadam and Rahimi, A similarity solution of flow and heat transfer between

20- two rotating spheres with constant angular velocity, Scientia Iranica, 2008.

W.H. Press and B.P. Flannery and S.A. Teukolsky and A.T. Vetterling, "Numerical Recipes, The Art of Scientific Computing", Cambridge University Press, Cambridge, 1997