RESEARCH NOTE

THREE NEW SYSTEMATIC APPROACHES FOR COMPUTING HEFFRON-PHILLIPS MULTI-MACHINE MODEL COEFFICIENTS

M. H. Modir Shanechi and M. Oloomi Buygi

Department of Electrical Engineering, Ferdowsi University
Mashhad, Iran, modir-h@ferdowsi.um.ac.ir- m_oloomi@ferdosi.um.ac.ir

H. Ghafoori-Fard

Department of Electrical Engineering, Amirkabir University
Tehran, Iran, h_ghafoorifard@hotmail.com

(Received: August 19, 2000 – Accepted: January 4, 2001)

Abstract This paper presents three new systematic approaches for computing coefficient matrices of the Heffron-Phillips multi-machine model (K1, …, K6). The amount of computations needed for conventional and three new approaches are compared by counting number of multiplications and divisions. The advantages of new approaches are: (1) their computation burdens are less than 73 percent of that of conventional approach, for a reduced network, (2) they are able to model infinite bus directly, whereas the conventional approach cannot, (3) The second and third approaches are able to account for voltage dependent loads and (4) The third approach preserves network structure and doesn't deal with *q* and *d* components and Blondel-Park transformation. The coefficients of the Heffron-Phillips model for a five-bus network and the New England system are computed by four approaches. The results agree within the bounds of admissible approximation. Computation times confirm the result of counting number of multiplications and divisions.

Key Words Simplified Linear Model, Multi-Machine Models, Heffron-Philips Model

چکیده در این مقاله سه روش جدید برای محاسبه ضرایب (K1,…, K6) مدل چند ماشینه هفرون–فیلیپس ارائه شده است. مزایای این روشها عبارتند از: (1) برای یک شبکه که باسهای بار آن حذف گردیده است، حجم محاسبات آنها کمتر از 73 درصد حجم محاسبات روش معمول می‌باشد؛ (2) این روشها قادرند باس بینهایت را مستقیماً مدل نمایند در صورتیکه روش معمول قادر نمی‌باشد؛ (3) روشهای دوم و سوم قادرند بارهای متغیر با ولتاژ را در نظر بگیرند و (4) روش سوم ساختار شبکه را حفظ نموده و با مولفه‌های q و d تبدیل بلاندل پارک سر و کار ندارد. حجم محاسباتی که برای روشهای مختلف مورد نیاز است بوسیله شمارش تعداد ضرب‌ها و تقسیمهای هر روش مقایسه شده است. ضرایب مدل هفرون–فیلیپس برای یک شبکه پنج شینه و برای شبکه نیوانگلند توسط چهار روش محاسبه گردیده است. ضرایب با تقریب قابل قبولی با یکدیگر مساویند. زمان محاسبه ضرایب نتیجه مقایسه بالا را تایید می‌نماید.

INTRODUCTION

In 1952, Heffron and Phillips [1] presented a simplified linear model for a synchronous machine connected to an infinite bus with a local impedance load. Thereafter this model has been used extensively in power system dynamic analysis. De Mello and Concordia explored the small perturbation stability characteristic of one machine-infinite bus by means of frequency response analysis [2]. De Mello and Laskowski used this model to find the system configurations and loading conditions that produce negative damping [3]. This model was later generalized for multi-machine power systems [4] and was widely used to study means of increasing damping and coordinating PSS's via the supplementary excitation control [4-10].

In adaptive control and fast small signal stability analysis [11], rapidness of computing Heffron-Phillips model coefficients is very important. The conventional approach has intensive computations, its running time is large, and it cannot account for

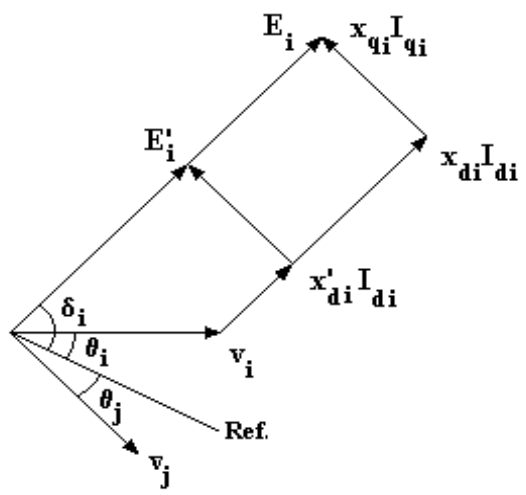

Figure 1. Phasor diagram of ith bus.

infinite bus directly. In the conventional approach infinite bus is modeled by a large machine, the coefficient matrices K1,…, K6 are computed and the row and column related to infinite bus are omitted. This increases the amount of computation. Furthermore, this approach is not structure preserving. It is not able to account for non-impedance loads, and load buses must be omitted before computing coefficients. The above disadvantages are remedied in the present approaches.

In section 2 the model is set up. In sections 3, 4, and 5 three new systematic approaches for computing (K1, …, K6) are presented. The first approach is applicable only to networks with impedance loads. The second approach is applicable for networks with impedance loads, voltage dependent loads and constant power loads at generator terminal buses. The third approach is applicable for networks with impedance loads, voltage dependent loads and constant power loads at generator terminal buses or load buses. The third approach doesn't deal with *q* and *d* components and Blondel-Park transformation [12]. Accounting for infinite bus is presented in section 6. In section 7 amount of computations of different approaches are compared. Two examples are given in section 8.

MODEL SET UP

Consider an *n* machine network with simplified linear model [12] for each machine, then:

$$\begin{aligned} P_{gi} &= f_{Pi}(\delta_1,..., \delta_n, E'_1,..., E'_n) \\ E_i &= f_{Ei}(\delta_1,..., \delta_n, E'_1,..., E'_n) \\ V_i &= f_{Vi}(\delta_1,..., \delta_n, E'_1,..., E'_n) \qquad i = 1,..., n \end{aligned} \tag{1}$$

Where V_i, P_{gi}, E_i and E'_i are terminal voltage, generated active power, open circuit voltage and internal stator voltage of the ith machine. δ_i is the angle between E'_i and a common synchronously rotating reference frame as shown in Figure 1. Each phasor is written in terms of its d and q components as:

$$\overline{f}_i = (f_{qi} + j f_{di})e^{j\delta_i} \tag{2}$$

Where $\overline{f_i}$ represents voltage, current or flux linkage of the *i*th machine. Linearizing (1):

$$\begin{aligned} \Delta P_{gi} &= K1_{i1}\Delta\delta_1 + ... + K1_{in}\Delta\delta_n + K2_{i1}\Delta E'_1 \\ &\quad +... + K2_{in}\Delta E'_n \\ \Delta E_i &= K4_{i1}\Delta\delta_1 + ... + K4_{in}\Delta\delta_n + K3^{-1}_{i1}\Delta E'_1 \\ &\quad +... + K3^{-1}_{in}\Delta E'_n \\ \Delta V_i &= K5_{i1}\Delta\delta_1 + ... + K5_{in}\Delta\delta_n + K6_{i1}\Delta E'_1 \\ &\quad +... + K6_{in}\Delta E'_n \qquad i = 1,..., n \end{aligned} \tag{3}$$

From (3) and the simplified linear model, Heffron-Phillips model block diagram will be derived as in Figure 2 [4].

FIRST APPROACH

Consider an *n* machines system with impedance loads. All load buses have been omitted [13]. This approach uses linearized KCL equations at each bus, for computing $\Delta V_i, \Delta P_{gi}, \Delta E_i$ in terms of state variables $\Delta\delta_1,..., \Delta\delta_n, \Delta E'_1,..., \Delta E'_n$.

Generated Current The relation between V_i and E'_i is as follows:

$$\overline{V}_i = (V_{qi} + jV_{di})e^{j\delta_i} = \overline{E'_i} - j\,x_{qi}I_{qi}e^{j\delta_i} - j\,x'_{di}I_{di}\,je^{j\delta_i} \qquad i = 1,..., n \tag{4}$$

Separating real and imaginary parts, linearizing and grouping:

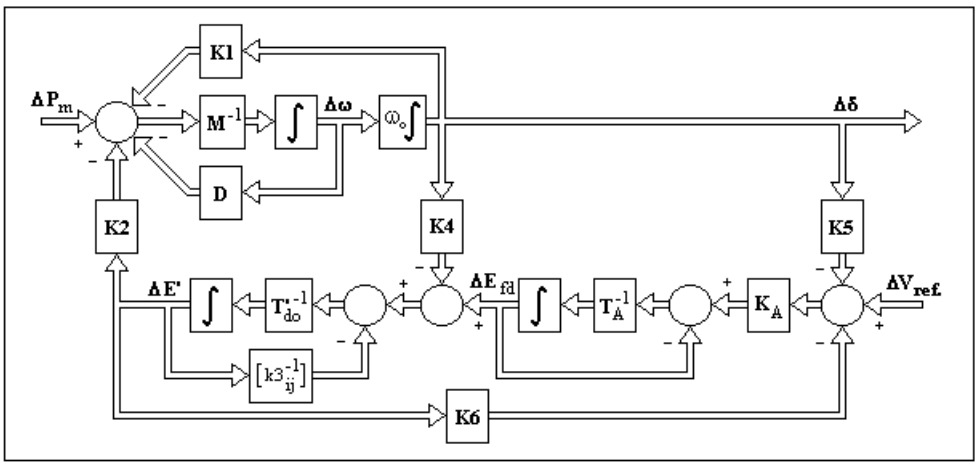

Figure 2. Multi-machine Heffron-Phillips block diagram.

$$\begin{bmatrix} \Delta I_q \\ \Delta I_d \end{bmatrix} = \begin{bmatrix} 0 & \Gamma 1 \\ B2 & 0 \end{bmatrix} \begin{bmatrix} \Delta V_q \\ \Delta V_d \end{bmatrix} + \begin{bmatrix} 0 \\ A2 \end{bmatrix} [\Delta E'] \qquad (5)$$

Where $\Delta I_q = [\Delta I_{q1}, ..., \Delta I_{qn}]^T$ and ΔI_d, ΔV_q, ΔV_d, $\Delta E'$ are similar n$\times$ *1* vectors, and $\Gamma 1, B2, A2$ are $n \times n$ matrices with their elements defined in Appendix A.

Injected Current The current that flows from the *i*th generator to its connected lines and loads is equal to:

$$\bar{I}_i = \sum_{k=1}^{n} \bar{Y}_{ik} \bar{V}_k \qquad i = 1,..., n \qquad (6)$$

Separating the d and q axis components, linearizing and grouping:

$$\begin{bmatrix} \Delta I_q \\ \Delta I_d \end{bmatrix} = \begin{bmatrix} B'1 & \Gamma'1 \\ -\Gamma'1 & B'1 \end{bmatrix} \begin{bmatrix} \Delta V_q \\ \Delta V_d \end{bmatrix} + \begin{bmatrix} A'1 \\ A'2 \end{bmatrix} [\Delta \delta] \qquad (7)$$

Where $\Delta I_q, \Delta I_d, \Delta V_q, \Delta V_d, \Delta\delta$ are $n \times 1$ vectors and $B'1, \Gamma'1, A'1, A'2$ are $n \times n$ matrices with their elements as defined in appendix A.

Computing ΔV_q and ΔV_d

Eliminating ΔI_q, ΔI_d between (5) and (7):

$$\begin{bmatrix} \Delta V_q \\ \Delta V_d \end{bmatrix} = \begin{bmatrix} X1 & X2 \\ X3 & X4 \end{bmatrix} \begin{bmatrix} \Delta\delta \\ \Delta E' \end{bmatrix} \qquad (8)$$

Computing K1 and K2 The power generated by the *i*th machine is:

$$P_{gi} = (\frac{1}{x'_{di}} - \frac{1}{x_{qi}}) V_{di} V_{qi} - \frac{1}{x'_{di}} E'_i V_{di}$$

$$Q_{gi} = \frac{-1}{x'_{di}} V_{qi}^2 - \frac{1}{x_{qi}} V_{di}^2 + \frac{1}{x'_{di}} E'_i V_{di} \quad i = 1,..., n \quad (9)$$

Linearizing and grouping (9):

$$\begin{bmatrix} \Delta P_g \\ \Delta Q_g \end{bmatrix} = \begin{bmatrix} B1 & C1 \\ B2 & C2 \end{bmatrix} \begin{bmatrix} \Delta V_q \\ \Delta V_d \end{bmatrix} + \begin{bmatrix} A1 \\ A2 \end{bmatrix} [\Delta E'] \qquad (10)$$

Where $\Delta P_g, \Delta Q_g, \Delta V_q, \Delta V_d, \Delta E'$ are $n \times 1$ vectors and $B1, C1, B2, C2, A1, A2$ are $n \times n$ matrices with their elements as defined in appendix B. Substituting for ΔV_q, ΔV_d from (8) into (10):

$$K1 = B1\,X1 + C1\,X3$$
$$K2 = A1 + B1\,X2 + C1\,X4 \qquad (11)$$

Computing K3 and K4 E'_i is related to E_i as follows:

$$E_i = E'_i - (x_{di} - x'_{di}) I_{di} =$$
$$E'_i - (\frac{x_{di} - x'_{di}}{x'_{di}})(V_{qi} - E'_i) \qquad i = 1,..., n \qquad (12)$$

Linearizing (12), and substituting for ΔV_{qi} from (8):

$$K3_{ij} = [(1 - \frac{x_{di}}{x'_{di}})x2_{ij}]^{-1} \qquad i \neq j$$

$$K3_{ii} = [\frac{x_{di}}{x'_{di}} + (1 - \frac{x_{di}}{x'_{di}})x2_{ii}]^{-1}$$

$$K4_{ij} = (1 - \frac{x_{di}}{x'_{di}})x1_{ij}$$

$$i = 1,...,n \qquad j = 1,...,n \qquad (13)$$

Computing K5 and K6 Voltage of each bus is related to its components as follows:

$$V_i^2 = V_{qi}^2 + V_{di}^2 \qquad i = 1,..., n \qquad (14)$$

Linearizing and grouping (14) yields:

$$\Delta V = \upsilon_q \, \Delta V_q + \upsilon_d \, \Delta V_d \qquad (15)$$

Where υ_q and υ_d are diagonal matrices with elements (V_{qi} / V_i) and (V_{di} / V_i) respectively. Substituting (8) into (15):

$$\mathbf{K5} = \upsilon_q \, X1 + \upsilon_d \, X3$$

$$\mathbf{K6} = \upsilon_q \, X2 + \upsilon_d \, X4 \qquad (16)$$

SECOND APPROACH

Consider an n machines system with impedance loads on load buses, and impedance or voltage dependent or power constant loads on generator terminal buses. Suppose load buses are omitted. The load of the ith generator terminal bus can be modeled as:

$$P_{di} = f_{pi}(V_i)$$

$$Q_{di} = f_{qi}(V_i) \qquad i = 1,...,n \qquad (17)$$

This approach uses linearized power flow equations at each bus for computing ΔV_i, ΔP_{gi} and ΔE_i in terms of state variables. $\Delta\delta_1$, $\Delta\delta_1,...,\Delta\delta_n, \Delta E'_1, ..., \Delta E'_n$.

Generated Power Linearized generator power equations are as (10).

Injected Power The power flowing from the ith generator to its connected lines and loads is equal to:

$$P_{gi} = P_{di} + P_i = f_{pi}(V_{qi}, V_{di}) + \sum_{k=1}^{n} Y_{ik}[(V_{qi}V_{qk} + V_{di}V_{dk})C_{ik} - (V_{qi}V_{dk} - V_{di}V_{qk})S_{ik}]$$

$$Q_{gi} = Q_{di} + Q_i = f_{qi}(V_{qi}, V_{di}) - \sum_{k=1}^{n} Y_{ik}[(V_{qi}V_{qk} + V_{di}V_{dk})S_{ik} + (V_{qi}V_{dk} - V_{di}V_{qk})C_{ik}]$$

$$i = 1,...,n \qquad (18)$$

Where:
$C_{ik} = \cos(\delta_k - \delta_i + \gamma_{ik})$, $S_{ik} = \sin(\delta_k - \delta_i + \gamma_{ik})$.
Linearizing and grouping (18):

$$\begin{bmatrix} \Delta \mathbf{P}_g \\ \Delta \mathbf{Q}_g \end{bmatrix} = \begin{bmatrix} B'1 & C'1 \\ B'2 & C'2 \end{bmatrix} \begin{bmatrix} \Delta V_q \\ \Delta V_d \end{bmatrix} + \begin{bmatrix} A'1 \\ A'2 \end{bmatrix} [\Delta\delta] \qquad (19)$$

Where $\Delta \mathbf{P}_g$, $\Delta \mathbf{Q}_g$, ΔV_q, ΔV_d, $\Delta\delta$ are $n \times 1$ vectors and $B'1, C'1, B'2, C'2, A'1, A'2$ are $n \times n$ matrices with their elements as defined in appendix B.

Computing ΔV_q and ΔV_d
From (10) and (19):

$$\begin{bmatrix} \Delta V_q \\ \Delta V_d \end{bmatrix} = \begin{bmatrix} X1 & X2 \\ X3 & X4 \end{bmatrix} \begin{bmatrix} \Delta\delta \\ \Delta E' \end{bmatrix} \qquad (20)$$

Computing K1, …, K6 Matrices K1, …, K6 can be calculated from the formulas presented in sections 3, 4, 3.5 and 3.6.

THIRD APPROACH

Consider an n machines network with m load buses. Suppose generator terminal buses have been

numbered *1* to *n* and load buses *n +1* to *n+m*. Each load can be modeled with an impedance or as in (17). This approach uses linearized power flow equations at each bus for computing $\Delta V_i, \Delta P_{gi}, \Delta E_i$ in terms of state variables $\Delta\delta_1,..., \Delta\delta_n$, $\Delta E'_1,..., \Delta E'_n$.

Generated Power Generated power by the *i*th machine is equal to:

$$P_{gi} = \frac{V_i E'_i}{x'_{di}} \sin(\delta_i - \theta_i)$$
$$+ (\frac{1}{x_{qi}} - \frac{1}{x'_{di}}) \frac{V_i^2}{2} \sin 2(\delta_i - \theta_i)$$
$$Q_{gi} = \frac{V_i E'_i \cos(\delta_i - \theta_i) - V_i^2}{x'_{di}}$$
$$- (\frac{1}{x_{qi}} - \frac{1}{x'_{di}}) V_i^2 \sin^2(\delta_i - \theta_i) \qquad i = 1,...,n \qquad (21)$$

Where θ_i is the voltage angle of *i*th bus. Linearizing and grouping (21):

$$\begin{bmatrix} \mathbf{\Delta P}_g \\ \mathbf{\Delta Q}_g \end{bmatrix} = \begin{bmatrix} \mathbf{B1} & \mathbf{C1} \\ \mathbf{B2} & \mathbf{C2} \end{bmatrix} \begin{bmatrix} \mathbf{\Delta V}_g \\ \mathbf{\Delta \theta}_g \end{bmatrix} + \begin{bmatrix} \mathbf{-C1} & \mathbf{A1} \\ \mathbf{-C2} & \mathbf{A2} \end{bmatrix} \begin{bmatrix} \mathbf{\Delta \delta} \\ \mathbf{\Delta E'} \end{bmatrix} \qquad (22)$$

Where $\mathbf{\Delta P}_g$, $\mathbf{\Delta Q}_g$, $\mathbf{\Delta V}_g$, $\mathbf{\Delta \theta}_g$, $\mathbf{\Delta E'}$, $\mathbf{\Delta \delta}$ are $n \times 1$ vectors and **B1, C1, B2, C2, A1, A2** are $n \times n$ matrices with their elements as defined in appendix C.

Injected Power The power injected by the ith generator to its connected lines and loads is equal to:

$$P_{gi} = \sum_{k=1}^{n} V_i V_k Y_{ik} \cos(\theta_k - \theta_i + \gamma_{ik}) + f_{pi}(V_i)$$
$$Q_{gi} = -\sum_{k=1}^{n} V_i V_k Y_{ik} \sin(\theta_k - \theta_i + \gamma_{ik}) + f_{qi}(V_i)$$
$$i = 1,...,n+m \qquad (23)$$

Linearizing and grouping (23) yields:

$$\begin{bmatrix} \mathbf{\Delta P}_g \\ \mathbf{0} \\ \mathbf{\Delta Q}_g \\ \mathbf{0} \end{bmatrix} = \begin{bmatrix} \mathbf{B'1}_{gg} & \mathbf{B'1}_{gl} & \mathbf{C'1}_{gg} & \mathbf{C'1}_{gl} \\ \mathbf{B'1}_{lg} & \mathbf{B'1}_{ll} & \mathbf{C'1}_{lg} & \mathbf{C'1}_{ll} \\ \mathbf{B'2}_{gg} & \mathbf{B'2}_{gl} & \mathbf{C'2}_{gg} & \mathbf{C'2}_{gl} \\ \mathbf{B'2}_{lg} & \mathbf{B'2}_{ll} & \mathbf{C'2}_{lg} & \mathbf{C'2}_{ll} \end{bmatrix} \begin{bmatrix} \mathbf{\Delta V}_g \\ \mathbf{\Delta V}_l \\ \mathbf{\Delta \theta}_g \\ \mathbf{\Delta \theta}_l \end{bmatrix} \qquad (24)$$

Where:

$\mathbf{\Delta V}_g = [\Delta V_1,..., \Delta V_n]$, $\mathbf{\Delta V}_l = [\Delta V_{n+1},..., \Delta V_{n+m}]$ and other vectors are defined similarly. Elements of sub-matrices are defined in appendix C. Eliminating $\mathbf{\Delta V}_l$ and $\mathbf{\Delta \theta}_l$:

$$\begin{bmatrix} \mathbf{\Delta P}_g \\ \mathbf{\Delta Q}_g \end{bmatrix} = \begin{bmatrix} \mathbf{B'1} & \mathbf{C'1} \\ \mathbf{B'2} & \mathbf{C'2} \end{bmatrix} \begin{bmatrix} \mathbf{\Delta V}_g \\ \mathbf{\Delta \theta}_g \end{bmatrix} \qquad (25)$$

Where $\mathbf{\Delta P}_g$, $\mathbf{\Delta Q}_g$, $\mathbf{\Delta V}_g$, $\mathbf{\Delta \theta}_g$ are $n \times 1$ vectors and **B′1, C′1, B′2, C′2** are $n \times n$ matrices.

If loads of load buses are impedance loads, omitting load buses and computing (25) directly involves less computation than computing it from (24) (see section 7).

Computing $\mathbf{\Delta V}_g$ and $\mathbf{\Delta \theta}_g$ From (22) and (25):

$$\begin{bmatrix} \mathbf{\Delta V}_g \\ \mathbf{\Delta \theta}_g \end{bmatrix} = \begin{bmatrix} \mathbf{X1} & \mathbf{X2} \\ \mathbf{X3} & \mathbf{X4} \end{bmatrix} \begin{bmatrix} \mathbf{\Delta \delta} \\ \mathbf{\Delta E'} \end{bmatrix} \qquad (26)$$

Computing K1 and K2 Substituting (26) into (22) yields:

$$\mathbf{K1} = -\mathbf{C1} + \mathbf{B1\,X1} + \mathbf{C1\,X3}$$
$$\mathbf{K2} = \mathbf{A1} + \mathbf{B1\,X2} + \mathbf{C1\,X4} \qquad (27)$$

Computing K3 and K4 E'_i, E_i and V_i are related as follows:

$$E_i = \frac{x_{di}}{x'_{di}} E'_i + (1 - \frac{x_{di}}{x'_{di}}) V_i \cos(\delta_i - \theta_i) \qquad (28)$$

Linearizing (28) and substituting for V_i form (26):

TABLE 1. Total NMD of Conventional Approach.

Computation	NMD	Comments
$\overline{\boldsymbol{Y}}_t^{-1}$	$6(n+p)^3$	This matrix is complex
$\left\{\overline{\boldsymbol{Y}}_t^{-1} + j\,\boldsymbol{X}'_d\right\}^{-1}$	$6(n+p)^3$	This matrix is complex
$\boldsymbol{\Delta I_q}$	$2.5(n+p)^3$	$\boldsymbol{L_q \Delta I_q = P_q \Delta\delta + Q_q \Delta E'}$
$\boldsymbol{Y_d}$, $\boldsymbol{F_d}$	$2(n+p)^3$	$\boldsymbol{F_d = P_d + M_d F_q}$, $\boldsymbol{Y_d = Q_d + M_d Y_q}$
Total	$16.5(n+p)^3$	

$$K3_{ij} = [h1_i x2_{ij} + h2_i x4_{ij}]^{-1} \qquad i \neq j$$

$$K3_{ii} = [(\frac{x_{di}}{x'_{di}}) + h1_i x2_{ii} + h2_i x4_{ii}]^{-1}$$

$$K4_{ij} = h1_i x1_{ij} + h2_i x3_{ij} \qquad i \neq j$$

$$K4_{ii} = -h2_i + h1_i x1_{ii} + h2_i x3_{ii} \qquad (29)$$

Where:

$$h1_i = (1 - \frac{x_{di}}{x'_{di}})\cos(\delta_i - \theta_i)$$

$$h2_i = (1 - \frac{x_{di}}{x'_{di}})\sin(\delta_i - \theta_i)$$

Computing K5 and K6 Comparing (3) and (26) yields:

$$\mathbf{K5 = X1}$$

$$\mathbf{K6 = X2} \qquad (30)$$

Accounting for Infinite Bus Suppose bus No. k is an infinite bus then $\Delta E'_k, \Delta\delta_k, \Delta V_k$, $\Delta E'_k, \Delta\delta_k, \Delta V_k, \Delta\theta_k, \Delta V_{qk}, \Delta V_{dk}$ are zero and hence row k of vectors $\boldsymbol{\Delta E', \Delta\delta, \Delta V_g, \Delta\theta_g, \Delta V_q, \Delta V_d}$ and consequently column k of all sub-matrices in equations (5), (7), (10), (19), (22), (25) are omitted. Furthermore, equations related to the k's bus is not required for computing **K1, …, K6,** then row k of vectors $\boldsymbol{\Delta I_q, \Delta I_d, \Delta P_g, \Delta Q_g}$ and row k of all sub-matrices in (5), (7), (10), (19), (22), (25) are omitted. Therefore, infinite bus is modeled without increasing computations. Note that ΔI_{dk} and ΔI_{qk} are not zero, and hence conventional approach is not able to account for infinite bus directly.

Comparing Computation Times To compare amount of computations for different approaches, computations that are proportional to l and l^2 are ignored, where l is the dimension of matrices in each approach. Run time of addition or subtraction is much less than run time of multiplication or division and hence only number of multiplications and divisions (NMD) are compared. NMD that is needed to inverse a real (complex) square matrix with dimension l by Gausien-Jordan method [14] is approximately equal to $1.5l^3$ ($6l^3$).

Consider a multi-machine network with n generator terminal buses, m load buses, and p infinite buses. First assume $m=0$. NMD of conventional approach, as listed in Table 1 is approximately equal to $16.5(n+p)^3$. In our approaches infinite buses are modeled directly therefore $n+p$ reduces to n. In these approaches all computations except a $2n \times 2n$ matrix inversion are proportional to n or n^2. Note that NMD of each matrix multiplication is proportional to n^2, since in each matrix multiplication one matrix is diagonal. Therefore, NMD of each new approach is approximately equal to $1.5(2n)^3 = 12n^3$. The ratio of computations of proposed approaches to conventional approach is equal to $12n^3 / 16.5(n+p)^3$. Therefore, if $p=0$, the amount of computations of presented approaches are equal to 73 percent of computation amount of conventional approach, else they are less than 73.

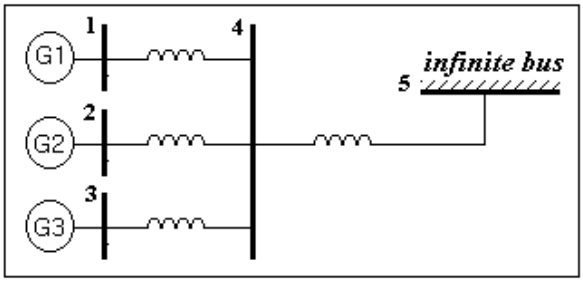

Figure 3. Five Buses Network.

Now suppose $m \neq 0$, if loads of load buses are impedance loads, load buses can be omitted. NMD that is needed for omitting load buses is equal to $6m^3 + 4mn^2$, $6m^3$ for matrix inversion and $4mn^2$ for substitution. Therefore, NMD of conventional approach and proposed approaches are equal to $6m^3 + 4mn^2 + 16.5(n+p)^3$ and $6m^3 + 4mn^2 + 12n^3$ respectively.

If there is a non-impedance load at load buses, load buses cannot be omitted, and only the third approach is capable to handle it. In this case (25) must be computed from (24), not directly, this will increases NMD to $12m^3 + 8mn^2 + 12n^3$.

Therefore, if loads of load buses are impedance loads, omitting load buses and computing (25) directly involves less computation than computing it from (24).

APPLICATIONS

Example 1: Five Buses Network Consider the five buses network of Figure 3. Its parameters and operating point are given in appendix D. Load bus was omitted first. The coefficients were computed by the four approaches and are given in appendix E. Run time of each approach for reduced network is given in table 2. As is shown in appendix E, the computed coefficients by different approaches are equal within admissible approximation. Run time of different approaches confirms that the amount of computations in new approaches is less than 73 percent of that of conventional approach.

Example 2: New England Network This network consists of 10 generator terminal buses, 29 load buses, and 46 lines [15]. All loads are impedance loads; the coefficients computed by the four approaches are equal within admissible approximation [16]. The run time of each approach for reduced network is given in table 2, confirming the results of section 7.

TABLE 2. Run Time Different Approaches in Mega Cycle of CPU Clock for Examples 1 and 2.

Ex.	Time of Con. Appr.	Time of 1st Appr.	Time of 2nd Appr.	Time of 3rd Appr.
Ex. 1	14.0768	4.2016	4.2304	4.2160
Ex. 2	101.3376	69.4368	69.5488	69.5792

CONCLUSION

Three new systematic approaches for computing Heffron-Phillips multi-machine model coefficients (K1, …, K6) were proposed. The first approach is applicable only on impedance load networks, but the second approach is able to account for voltage dependent and power constant loads at generator terminal buses, the third approach is able to account for voltage dependent and power constant loads at each bus. All proposed approaches are able to account for infinite bus directly without increasing the amount of computations. Comparing NMD of different approaches shows that, for a reduced network, NMD of new approaches is less than 73 percent of conventional approach. The amount of computations of third approach increases if there are non-impedance loads at load buses, and hence it is better to omit load buses when loads of load buses are impedance loads. The examples show that the results of four approaches are equal within admissible approximation. The run time of each approach confirms the result of comparing the amount of computations. Table 2 shows that run time of first approach is a little less than second and third approaches. The third approach doesn't deal with q and d components and Blondel-Park transformation.

APPENDIX A

Elements of First Approach's Sub-matrices

$\gamma 1_{ij} = 0 \qquad i \neq j, \quad \gamma 1_{ii} = \dfrac{-1}{x_{qi}}$

$$\alpha 2_{ij} = 0 \qquad i \neq j, \quad \alpha 2_{ii} = \frac{-1}{x'_{di}}$$

$$\beta 2_{ij} = 0 \qquad i \neq j, \quad \beta 2_{ii} = \frac{1}{x'_{di}}$$

$$\alpha' 1_{ij} = -Y_{ij}(V_{qj} S_{ij} + V_{dj} C_{ij}) \qquad i \neq j$$

$$\alpha' 1_{ij} = \sum_{\substack{k=1 \\ k \neq i}}^{n} Y_{ik}(V_{qk} S_{ik} + V_{dk} C_{ik})$$

$$\beta' 1_{ij} = Y_{ij} C_{ij}$$

$$\gamma' 1_{ij} = -Y_{ij} S_{ij}$$

$$\alpha' 2_{ij} = Y_{ij}(V_{qj} C_{ij} - V_{dj} S_{ij}) \qquad i \neq j$$

$$\alpha' 2_{ij} = -\sum_{\substack{k=1 \\ k \neq i}}^{n} Y_{ik}(V_{qk} C_{ik} - V_{dk} S_{ik})$$

APPENDIX B

Elements of Second Approach's Sub-matrices

$$a1_{ij} = 0 \qquad i \neq j, \quad a1_{ii} = \frac{-1}{x'_{di}} V_{di}$$

$$b1_{ij} = 0 \qquad i \neq j, \quad b1_{ii} = \left(\frac{1}{x'_{di}} - \frac{1}{x_{qi}}\right) V_{di}$$

$$c1_{ij} = 0 \qquad i \neq j, \quad c1_{ii} = \left(\frac{1}{x'_{di}} - \frac{1}{x_{qi}}\right) V_{qi} - \frac{1}{x'_{di}} E'_i$$

$$a2_{ij} = 0 \qquad i \neq j, \quad a2_{ii} = \frac{1}{x'_{di}} V_{qi}$$

$$b2_{ij} = 0 \qquad i \neq j, \quad b2_{ii} = \frac{1}{x'_{di}}(E'_i - 2V_{qi})$$

$$c2_{ij} = 0 \qquad i \neq j, \quad c2_{ii} = \frac{-2}{x_{qi}} V_{di}$$

$$a'1_{ij} = Y_{ij}[(V_{di} V_{qj} - V_{qi} V_{dj}) C_{ij} - (V_{qi} V_{qj} + V_{di} V_{dj}) S_{ij}] i \neq j$$

$$a'1_{ii} = -\sum_{\substack{k=1 \\ k \neq i}}^{n} a'1_{ik}$$

$$b'1_{ij} = Y_{ij}(V_{qi} C_{ij} + V_{di} S_{ij}) \qquad i \neq j$$

$$b'1_{ii} = 2V_{qi} C_{ii} Y_{ii} + \sum_{\substack{k=1 \\ k \neq 1}}^{n} Y_{ik}(V_{qk} C_{ik} - V_{dk} S_{ik}) + \frac{V_{qi}}{V_i} \frac{\partial f_{pi}(V_i)}{\partial V_i}$$

$$c'1_{ij} = Y_{ij}(V_{di} C_{ij} - V_{qi} S_{ij}) \qquad i \neq j$$

$$c'1_{ii} = 2V_{di} C_{ii} Y_{ii} + \sum_{\substack{k=1 \\ k \neq 1}}^{n} Y_{ik}(V_{dk} C_{ik} + V_{qk} S_{ik}) + \frac{V_{di}}{V_i} \frac{\partial f_{pi}(V_i)}{\partial V_i}$$

$$a'2_{ij} = Y_{ij}[(V_{qi} V_{dj} - V_{di} V_{qj}) S_{ij} - (V_{qi} V_{qj} + V_{di} V_{dj}) C_{ij}] i \neq j$$

$$a'2_{ii} = -\sum_{\substack{k=1 \\ k \neq i}}^{n} a'2_{ik}$$

$$b'2_{ij} = c'1_{ij} \qquad i \neq j$$

$$b'2_{ii} = -2V_{qi} S_{ii} Y_{ii} - \sum_{\substack{k=1 \\ k \neq 1}}^{n} Y_{ik}(V_{qk} S_{ik} + V_{dk} C_{ik}) + \frac{V_{qi}}{V_i} \frac{\partial f_{qi}(V_i)}{\partial V_i}$$

$$c'2_{ij} = -b'1_{ij} \qquad i \neq j$$

$$c'2_{ii} = -2V_{di} S_{ii} Y_{ii} - \sum_{\substack{k=1 \\ k \neq 1}}^{n} Y_{ik}(V_{dk} S_{ik} - V_{qk} C_{ik}) + \frac{V_{di}}{V_i} \frac{\partial f_{qi}(V_i)}{\partial V_i}$$

APPENDIX C

Elements of Third Approach's Sub-matrices

$$a1_{ij} = 0 \qquad i \neq j$$

$$a1_{ii} = \frac{V_i \sin(\delta_i - \theta_i)}{x'_{di}}$$

$$b1_{ij} = 0 \qquad i \neq j$$

$$b1_{ii} = \frac{E'_i \sin(\delta_i - \theta_i)}{x'_{di}} + \left(\frac{1}{x_{qi}} - \frac{1}{x'_{di}}\right) V_i \sin 2(\delta_i - \theta_i)$$

$$c1_{ij} = 0 \qquad i \neq j$$

$$c1_{ii} = -\frac{V_i E'_i \cos(\delta_i - \theta_i)}{x'_{di}} - \left(\frac{1}{x_{qi}} - \frac{1}{x'_{di}}\right) V_i^2 \cos 2(\delta_i - \theta_i)$$

$$a2_{ij} = 0 \qquad i \neq j$$

$$a2_{ii} = \frac{V_i \cos(\delta_i - \theta_i)}{x'_{di}}$$

$$b2_{ij} = 0 \qquad i \neq j$$

$$b2_{ii} = \frac{E'_i \cos(\delta_i - \theta_i) - 2V_i}{x'_{di}} - 2\left(\frac{1}{x_{qi}} - \frac{1}{x'_{di}}\right) V_i \sin^2(\delta_i - \theta_i)$$

$$c2_{ij} = 0 \qquad i \neq j$$

$$c2_{ii} = \frac{V_i E'_i \sin(\delta_i - \theta_i)}{x'_{di}} + \left(\frac{1}{x_{qi}} - \frac{1}{x'_{di}}\right) V_i^2 \sin 2(\delta_i - \theta_i)$$

$$b'1_{ij} = V_i Y_{ij} \cos(\theta_j - \theta_i + \gamma_{ij}) \qquad i \neq j$$

$$b'1_{ii} = 2V_i Y_{ii} \cos(\gamma_{ii}) + \sum_{\substack{k=1 \\ k \neq i}}^{n} V_k Y_{ik} \cos(\theta_k - \theta_i + \gamma_{ik}) + \frac{\partial f_{pi}(V_i)}{\partial V_i}$$

$$c'1_{ij} = -V_i V_j Y_{ij} \sin(\theta_j - \theta_i + \gamma_{ij}) \qquad i \neq j$$

$$c'1_{ii} = \sum_{\substack{k=1 \\ k \neq i}}^{n} V_i V_k Y_{ik} \sin(\theta_k - \theta_i + \gamma_{ik})$$

$$b'2_{ij} = -V_i Y_{ij} \sin(\theta_j - \theta_i + \gamma_{ij}) \qquad i \neq j$$

$$b'2_{ii} = -2V_i Y_{ii} \sin(\gamma_{ii}) - \sum_{\substack{k=1 \\ k \neq i}}^{n} V_k Y_{ik} \sin(\theta_k - \theta_i + \gamma_{ik}) + \frac{\partial f_{qi}(V_i)}{\partial V_i}$$

$$c'2_{ij} = -V_i V_j Y_{ij} \cos(\theta_j - \theta_i + \gamma_{ij}) \qquad i \neq j$$

$$c'2_{ii} = \sum_{\substack{k=1 \\ k \neq i}}^{n} V_i V_k Y_{ik} \cos(\theta_k - \theta_i + \gamma_{ik})$$

APPENDIX D

Characteristics of Five Buses Network

Machine Data:

Gen. No.	Rating (MVA)	xq=xd (pu)	x'd . (pu)	External reactance (pu)
1	166.6	1.164	0.146	0.0194
2	166.6	1.029	0.124	0.0194
3	325.0	0.625	0.084	0.0327
Inf. bus	------	0.0001	0.00001	0.067

Operating Point:

Gen. No.	Active Power (MW)	Reactive Power (MW)	Terminal Voltage (pu)	Voltage Angle (deg)
1	90.00	27.55	1.018	14.55
2	90.00	27.55	1.018	14.55
3	127.50	20.51	1.018	16.77
Inf. Bus	-355.50	-22.47	1.000	0.000

APPENDIX E

Coefficients K1, …, K6

Computed Coefficients for Example 1- Conventional Approach:

K1

2.809179	-0.443749	-0.651488
-0.409413	2.916649	-0.692354
-0.715461	-0.793941	4.389877

K2

3.283734	-0.598874	-0.844573
-0.600665	3.485166	-0.927487
-0.783637	-0.855077	5.017840

K3

-6.131165	1.182260	1.426841
1.050029	-6.094800	1.450936
0.760465	0.870719	-4.547827

K4

3.347144	-0.644758	-0.786225
-0.510889	3.150677	-0.773188
-0.509724	-0.596232	2.747217

K5

0.050734	0.031344	-0.008382
0.012884	0.066682	-0.007635
0.017770	0.032494	0.049752

K6

0.212040	0.148171	0.127395
0.116303	0.255361	0.124345
0.103873	0.130430	0.310339

First Approach:

K1

2.808604	-0.424903	-0.655489
-0.424907	2.919343	-0.689649
-0.655470	-0.689623	4.351999

K2

3.285408	-0.596842	-0.842596
-0.599098	3.486200	-0.922443
-0.780073	-0.847234	5.009098

K3

-6.130941	1.181662	1.430252
1.050505	-6.093608	1.449237
0.760063	0.866306	-4.533863

K4

3.344496	-0.609929	-0.794222
-0.540199	3.154956	-0.766865
-0.455869	-0.499064	2.709859

K5

0.051390	0.027487	-0.007359
0.016605	0.066300	-0.008675
0.011640	0.020364	0.055023

K6

0.212821	0.148827	0.129386
0.117043	0.256133	0.125676
0.104677	0.130726	0.313786

Second Approach:

K1

2.808604	-0.424903	-0.655490
-0.424907	2.919343	-0.689690
-0.655470	-0.689622	4.351997

K2

3.285408	-0.596842	-0.842596
-0.599098	3.486200	-0.922443
-0.780073	-0.847234	5.009097

K3

-6.130941	1.181662	1.430252
1.050505	-6.093609	1.449237
0.760063	0.866306	-4.533863

K4

3.344496	-0.609929	-0.794222
-0.540199	3.154956	-0.766865
-0.455869	-0.499064	2.709858

K5

0.051390	0.027487	-0.007359
0.016605	0.066300	-0.008675
0.011640	0.020364	0.055023

K6

0.212820	0.148826	0.129386
0.117042	0.256133	0.125676
0.104677	0.130726	0.313786

Third Approach:

K1

2.808341	-0.424850	-0.655428
-0.424850	2.918862	-0.689532
-0.655428	-0.689532	4.351735

K2

3.285185	-0.596866	-0.842605
-0.599105	3.485797	-0.922404
-0.780149	-0.847295	5.008799

K3

-6.130904	1.181713	1.430294
1.050541	-6.093570	1.449259
0.760107	0.866352	-4.533810

K4

3.344319	-0.609888	-0.794192
-0.540164	3.154646	-0.766802
-0.455849	-0.499021	2.709760

K5

0.051388	0.027489	-0.007355
0.016604	0.066302	-0.008671
0.011637	0.020364	0.055029

K6

0.212815	0.148825	0.129383
0.117035	0.256133	0.125672
0.104667	0.130721	0.313786

REFERENCES

1. Heffron, W. G. and Phillips, R. A., "Effect of a Modern Amplitude Voltage Regulator on Under Excited Operation of Large Turbine Generators", ***IEEE Trans. PAS***, Vol. 71, (August 1952), 692-697.
2. De Mello, F. P. and Concordia, C., "Concepts of Synchronous Machine Stability as Affected by Excitation Control", ***IEEE Trans. PAS***, Vol. 88, No. 4, (April 1969), 316-329.
3. De Mello, F. P. and Laskowski, T. F., "Concepts of Power System Dynamic Stability", ***IEEE Trans. PAS***, Vol. 94, No. 3, (May/June 1975), 827-833.
4. Yao-Nan Yu, "*Electric Power System Dynamics",* Academic Press, New York, 1983.
5. **D**e Mello, F. P., Nolan, P. J., Laskowski, T. F. and Undrill, J. M., "Coordinated Application of Stabilisers in Multi-machine Power Systems", ***IEEE Trans. PAS***, Vol. 99, No. 3, (1980), 892-901.
6. Fleming, R. J., Mohan, M. A. and Parvatisam, K. P., "Selection of Parameters of Stabilizers in Multi-machine Power Systems", ***IEEE Trans. PAS***, Vol. 100, (May 1981), 2329-2333.
7. Gooi, H. B., Hill, E. F., Mobarak, M. A., Throne, D. H. and Lee, T. H., "Coordinated Multi-machine Stabilizer Settings without Eigenvalue Drift", ***IEEE Trans. PAS***, Vol. 100, (1981), 3879-3886.
8. Abe, S. and Doi, A., "A New Power System Stabilizer Synthesis in Multi-Machine Power Systems", ***IEEE Trans. PAS***, Vol. 102, (1981), 3910-3918.
9. Dio, A. and Abe, S., "Coordinated Synthesis of Power System Stabilizers in Multi-machine Power Systems", ***IEEE Trans. PAS***, Vol. 103, No. 6, (June 1984), 1473-1476.
10. Abdalla, O. H., Hassan, S. A. and Tweing, N. T., "Coordinated Stabilization of a Multi-machine Power System", ***IEEE Trans. PAS***, Vol. 103, No. 3, (March 1984), 483-494.
11. Khederzadeh, M. and Ehsan, M., "Fast Small Signal Stability Analysis of Power Systems for Real-Time Operations Planning", ***ICEE***, (May 1996).
12. Bergen, R. A., "Power System Analysis", Prentice-Hall, Englewood Cliffs, (1986).
13. Stevenson, W. D., "Elements of Power System Analysis". Academic Press, McGraw-Hill, New York, (1982).
14. Burden, R. l., Faires, J. D. and Reynolds, A. C., "Numerical Analysis", Prindle, Weber and Schmidt, Boston, (1981).
15. Athay, T., Sherkey, V. R., Podmore, R., Virmani, S. and Puech, C., "Transient Energy Stability Analysis", ***Conference on System Engineering for Power: Emergency Operating State Control-Section IV***, Davos, Switzerland, (Sept. 1979).
16. Oloomi, M., "Low Frequency Oscillation Analysis of Power Systems with Frequency and Voltage Dependent Loads", B.S. Thesis, Ferdowsi University, (1993).