Prediction of Oil Hotspot Temperature in a Distribution Transformer by CFD Method

M.Sc. L. Raeisian[1, 2*], Prof. Dr.-Ing. P. Werle[1], Prof. Dr.-Ing. H. Niazmand[2], Dr.-Ing. E. Ebrahimnia-Bajestan[3]

[1] Leibniz Universität Hannover, Institute of Electric Power Systems, Division of High Voltage Engineering and Asset Management, Schering-Institute, Callinstr. 25A, 30167 Hannover, Germany

[2] Ferdowsi University of Mashhad, Mechanical Engineering Department, 9177948974 Mashhad, Iran

[3] Quchan University of Technology, Department of Mechanical Engineering, 9477167335 Quchan, Iran

Summary / Abstract

In the current paper, a comprehensive three dimensional computational scheme was employed considering the detailed geometrical specifications of a 200 kVA distribution transformer in order to simulate the temperature pattern of oil inside the transformer and to obtain the hotspot temperature. Simulation of the convective heat transfer of the transformer was implemented by ANSYS FLUENT, along with ANSYS ICEM for meshing the whole geometry. Moreover, the accuracy of the numerical model was established via comparing the numerical results with the measured temperatures of a running transformer. It was founded that the oil channels of the active part are the most critical region from a thermal point of view and the oil channels inside the active part experience the highest level of temperature in the transformer. Furthermore, the hotspot temperature of the considered transformer is 114 ˚C and located near to top section of oil channel of low voltage windings.

NOMENCLATURE

g	gravitational acceleration ($m.s^{-2}$)
H	fin height (m)
k	thermal conductivity ($W.m^{-1}.K^{-1}$)
L_C	characteristic length (m)
p	pressure (Pa)
T	temperature (K)
u	velocity in X direction ($m.s^{-1}$)
v	velocity in Y direction ($m.s^{-1}$)
w	velocity in Z direction ($m.s^{-1}$)
Subscripts	
a	air layer
s	surface
∞	ambient
Greek letters	
β	thermal expansion coefficient
ρ	density ($kg.m^{-3}$)
μ	viscosity (Pa.s)
α	thermal diffusivity ($m^2.s^{-1}$)
ν	Kinematic viscosity ($m^2.s^{-1}$)

1 Introduction

Transformers, as one of the main equipment of electrical network, are indispensable in supplying the electric energy at required voltage levels to consumers.

The heat generated of core and windings during the transformer operation causes temperature rise in the internal structures of the transformer, which is one of the major reasons of transformer aging [1]. Among the various parameters that affect the transformer performance and aging, the location of the maximum temperature of transformer namely the *hotspot temperature* and its temperature level have been identified as the main factors on transformer aging and failures [2]. Furthermore, the rise in hotspot temperature leads to exponentially increase of the Loss-of-Life of transformers [3]. Therefore, study the temperature distribution of the coolant inside the transformer and determining the hotspot temperature is of special interest.

The most commonly hotspot temperature calculations procedure are given in the International Standards IEC 60076-2, ICE 60076-7 and IEEE C57.91. Furthermore, various calculation methods, based on solving of simplified forms of energy equation along with the proper boundary and operational conditions were presented by several researchers, which provide the possibility of fast prediction of the hotspot. For instance, Taghikhani and Gholami [4] examined the value and location of the hotspot in a power transformer by numerically solving of the partial differential form of heat conduction equations. Pradhan and Ramo [5] also presented a theoretical model to obtain the hotspot, based on a boundary value problem of heat conduction in windings employing the finite integral transform technique. Furthermore, Susa and Nordman [6] and Radakovic [7] attempt to calculate the hotspot temperature by employing some algorithms.

ISBN 978-3-8007-4807-5

Although, estimation of hotspot temperature is of practical importance, simplifications of the governing equations and geometrical models in above mentioned studies lead to the general and relatively low accurate results. In order to enhance the prediction accuracy, modeling the complete convective heat transfer of the entire transformer under the ambient conditions is a useful approach, which provides a thorough insight to the thermal behavior of transformer in addition to the hotspot temperature.
With this approach, El Wakil et al. [8] simulated the temperature distribution and fluid flow of the oil as cooling media in one phase of a 40 MVA power transformer. Oh and Ha [9] asymmetrically modeled natural convection of a 20 KVA one phase transformer. Furthermore, Tsilia [10] conducted a numerical study using a 3D finite element method to model the temperature distribution of the transformer. Chereches et al. [11] performed a numerical parametric study on a step-down power transformer. Eslamian et al. [12] also simulated the heat transfer of dry-type transformer by FEM and CFD models.
In these methods, a simplified model of the real geometries or governing equations have been studied which may limit the global view on temperature distribution of transformers.
In this regard, the main objective of the present study is to simulate the oil convective heat transfer inside the transformer considering the complete geometry of the transformer such as the details of oil channels and hollow fins in simulated actual boundary and operational conditions in order to predict the temperature distribution and the hotspot value and location.

2 Numerical modelling

2.1 Physical model

In this work, a 200 kVA distribution transformer was considered as case study to investigate the temperature distribution. This transformer has an active part include of core and layered windings and cooling part of tank, hollow fins. All parts along with their dimensions in meter are shown in Figures 1 to 3. Efforts were made here to model all parts in the actual transformer including fins and the four vertical oil channels (Oc.1, Oc.2, Oc.3, and Oc.4) inside the active part with their actual dimensions.

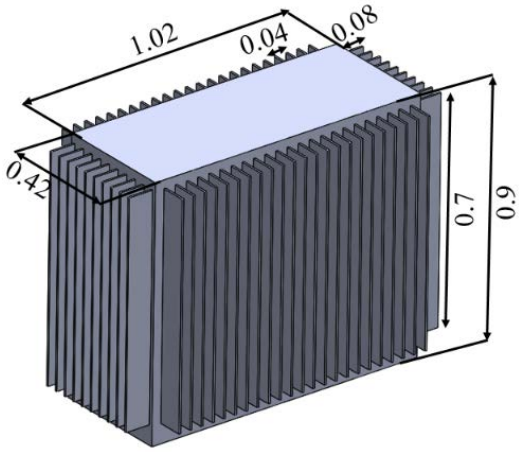

Figure 1 Details and dimensions of the simulated transformer tank and its hollow fins

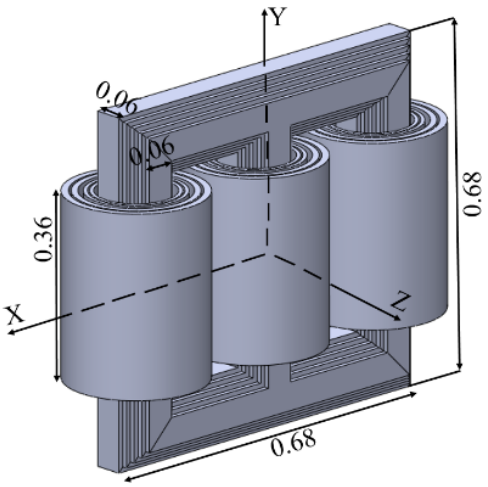

Figure 2 Details and dimensions of the simulated active part and oil channels

Figure 3a Design of core, windings and oil channels in the 200 KVA actual transformer

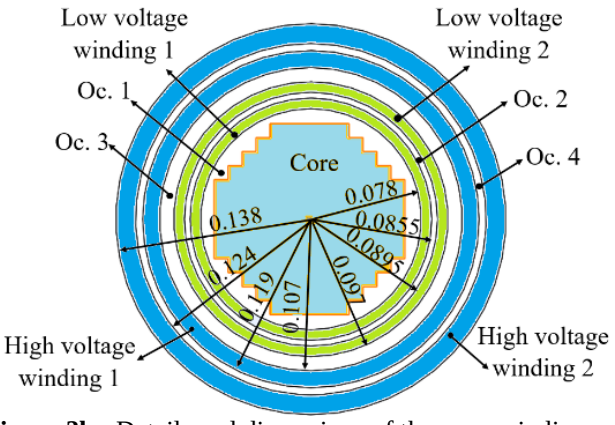

Figure 3b Details and dimensions of the core, windings and oil channels

2.2 Governing equation

Under the working conditions of the transformer, oil flow in the transformer is considered as laminar with the maximum Ra=5×10^8 which is far from turbulent flow and steady state flow. Therefore, the governing equations are as follows [13]:

Continuity:

$$\frac{\partial(\rho u)}{\partial x}+\frac{\partial(\rho v)}{\partial y}+\frac{\partial(\rho w)}{\partial z}=0 \tag{1}$$

X direction Momentum:

$$\frac{\partial(\rho u^2)}{\partial x}+\frac{\partial(\rho uv)}{\partial y}+\frac{\partial(\rho uw)}{\partial z}= -\frac{\partial P}{\partial x}+\frac{\partial}{\partial x}(\mu\frac{\partial u}{\partial x})+\frac{\partial}{\partial y}(\mu\frac{\partial u}{\partial y})+\frac{\partial}{\partial z}(\mu\frac{\partial u}{\partial z}) \tag{2}$$

Y direction Momentum:

$$\frac{\partial(\rho uv)}{\partial x}+\frac{\partial(\rho v^2)}{\partial y}+\frac{\partial(\rho vw)}{\partial z}=-\frac{\partial P}{\partial y} +\frac{\partial}{\partial x}(\mu\frac{\partial v}{\partial x})+\frac{\partial}{\partial y}(\mu\frac{\partial v}{\partial y})+\frac{\partial}{\partial z}(\mu\frac{\partial v}{\partial z})-\rho g \tag{3}$$

Z direction Momentum:

$$\frac{\partial(\rho uw)}{\partial x}+\frac{\partial(\rho vw)}{\partial y}+\frac{\partial(\rho w^2)}{\partial z} =-\frac{\partial P}{\partial z}+\frac{\partial}{\partial x}(\mu\frac{\partial w}{\partial x})+\frac{\partial}{\partial y}(\mu\frac{\partial w}{\partial y})+\frac{\partial}{\partial z}(\mu\frac{\partial w}{\partial z}) \tag{4}$$

Energy:

$$\frac{\partial(\rho C_p uT)}{\partial x}+\frac{\partial(\rho C_p vT)}{\partial y}+\frac{\partial(\rho C_p wT)}{\partial z} =\frac{\partial}{\partial x}(k\frac{\partial T}{\partial x})+\frac{\partial}{\partial y}(k\frac{\partial T}{\partial y})+\frac{\partial}{\partial z}(k\frac{\partial T}{\partial z}) \tag{5}$$

Solving the governing equations and simulation of convective heat transfer of transformer were carried out by ANSYS FLUENT, accompanied by ANSYS ICEM for meshing the whole geometry.

2.3 Properties of oil

Since the oil flow and temperature distributions rely on the oil thermo-physical properties, it is of practical importance to determine the thermal variation of oil properties, which are usually ignored in such studies. Accordingly, the obtained correlations based on the own measured data are presented in Eqs. (6) to (9) and employed in governing equations. It should be mention the equations are in Celcius.

$$\rho(T)=-0.6881T+897.62 \quad (kg.m^{-3}) \tag{6}$$

$$Cp(T)=6.6096T+1600.6 \quad (J.kg^{-1}.K^{-1}) \tag{7}$$

$$k(T)=0.0009T+0.1035 \quad (W.m^{-1}.K^{-1}) \tag{8}$$

$$\mu(T)=\frac{exp\left(\frac{1055}{T+141.8}-3.591\right)}{100} \quad (Pa.s) \tag{9}$$

2.4 Boundary conditions

In the studied transformer, the heat is transferred from the outer surfaces of the transformer's tank to the ambient air by mechanism of natural convection. In this regard, the equations of natural convection based on the geometry of surfaces, orientation, and properties of ambient air are employed to calculate the heat transfer coefficient as can be seen in Table 1 [14]. The Rayleigh number (*Ra*) and heat transfer coefficient (*h*) in Table 1 are defined as follow:

$$h=\frac{Nuk_a}{L_C} \tag{10}$$

$$Ra=\frac{g\beta_a(T_S-T_\infty)L_C^3}{\nu_a\alpha_a} \tag{11}$$

Table1 Boundary equations of the outer surfaces with ambient temperature of T_∞=28 °C

Surface	Nusselt correlation	Calculated h (W.m^{-2}.K^{-1})
Upper	$Nu=0.59Ra^{0.25}$	6.25
Bottom	$Nu=0.27Ra^{0.25}$	3.00
Vertical finned	$Nu=\left[\frac{576}{(Ra\,L_C/H)^2}+\frac{2.873}{(Ra\,L_C/H)^{0.5}}\right]^{-0.5}$	4.45

Furthermore, the generated heat of core and windings is transferred through their surfaces to the circulating oil. Therefore, the generated heat is considered as a constant heat flux that is uniformly distributed on the surfaces of core and windings. Hence, according to the loading condition of an actual transformer 308 W/m^2 and 470 W/m^2 are applied to the surfaces of the core and windings, respectively.

ISBN 978-3-8007-4807-5

2.5 Grid independency

In order to confirm the mesh independency and to arrive at the least number of elements that can yield accurate computational results, four different mesh sizes were chosen for discretizing the interior domain transformer. Grid 1 (642734 nodes), Grid 2 (1169252), Grid 3 (1678675) and Grid 4 (2581690) listed in Table 2 are used and in each case a converged solution of maximum temperature was presented as comparison. It can be observed that refinement of the grids from Grid 2 to Grid 3 system makes no obvious change in the maximum oil temperature. Thus, considering both the accuracy and the computational cost, the Grid 2 system with 1169252 nodes was selected as the appropriate mesh size.

Table 2 Maximum oil temperature variations for different grid systems under transformer full load operation

Item	Value			
Grid number	1	2	3	4
Max. Temperature (°C)	117.51	113.61	113.16	113.14

2.6 Validation

To confirm the accuracy of current computational model, a validation has been performed by comparing the numerical results with the measured data taken from the actual mentioned transformer in section 2.1. In this regard, the real transformer in 10 % load was considered as validation case and temperature of its outer surfaces recorded by thermography camera and 9 points along a horizontal line on the outer surface of the tank according to Figure 4 were selected as reference points. Then, temperature distribution was simulated based on the boundary conditions listed in Table 3 and the temperature of these points was compared with the temperature of the same points obtained from the simulation as shown in Figure 5.

Table 3 Boundary conditions for validation of the present model T_∞ =15°C

surface	Calculated h (W.m^{-2}.K^{-1})
Upper horizontal	h = 4.3 W.m^{-2}.K^{-1};
Bottom horizontal	h = 2.1 W.m^{-2}.K^{-1};
Vertical finned	h = 3.1 W.m^{-2}.K^{-1};
Windings	q = 4.5 W.m^{-2}
Core	q = 380 W.m^{-2}

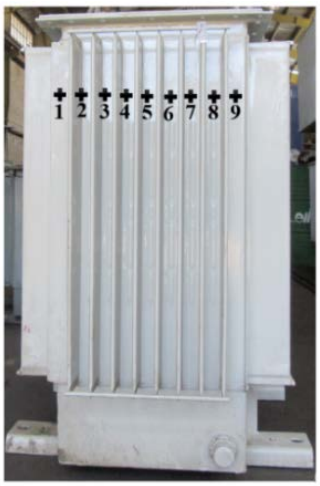

Figure 4 The positions of studied temperature line for validating the numerical result

Comparing the measured data and numerical results of the mentioned points in Figure 5a demonstrates an acceptable agreement with the average difference of 2 °C between the numerical result and measured data as shown in figure 5b, which leads to this conclusion that this model can reasonably predict the temperature of the transformer.

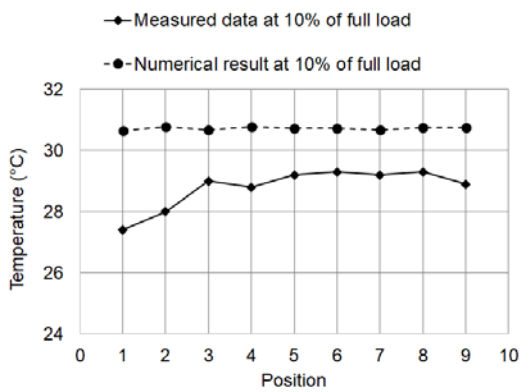

Figure 5a Comparison of measured data and numerical results at reference points near the top of side wall at 15 °C

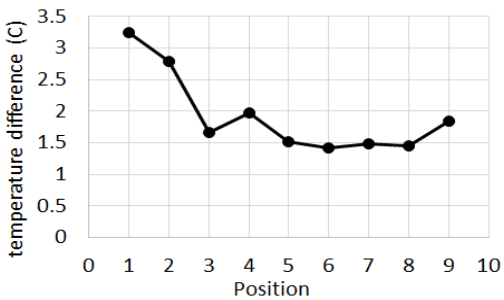

Figure 5b Temperature difference of measured data and numerical results

ISBN 978-3-8007-4807-5

3 Results and discussion

In this section, the aim is to evaluate the hotspot temperature and flow distributions of oil in an actual transformer employing CFD simulations.
First of all, the temperature field on two central plains of the transformer (Z=0, X=0) is illustrated in Figure 6 and 7. According to these figures, the maximum temperature of the transformer (hotspot) is 115 °C and is located on the top section of the narrow oil channels of windings.

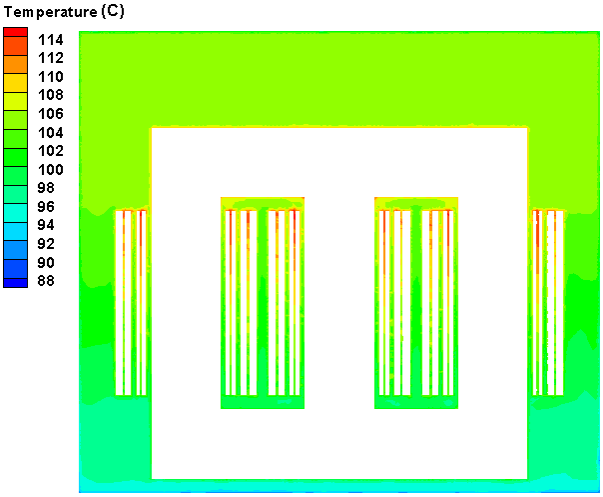

Figure 6 Temperature contour Z=0 plane

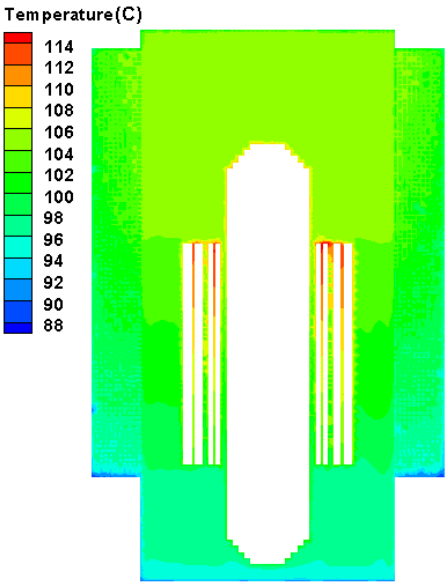

Figure 7 Temperature contour of X=0 plane

As mentioned above, it is clear from Figure 6 and 7, that the critical region of transformer from thermal point of view are the winding oil channels due to the high amount of heat rejection from the windings. In order to specify the location of the hotspot, the temperature of oil channels is shown along some vertical line as in Figure 8.

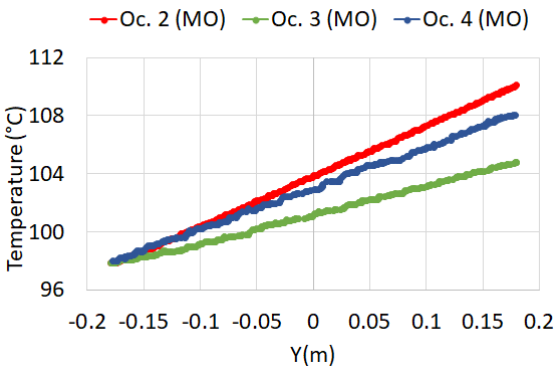

Figure 8 Temperature variation along oil channels

As it is presented, the temperature in lower section of all channels are almost the same and by moving to the top section, the temperature of oil on low voltage windings increases more than others and experience the highest level of temperature in transformer. Thus, it is clear that the hotspot is located in this channel between the two LV layer windings.
In Figure 9 the velocity contours of oil is demonstrated on Z=0 plane. As it can be seen, the velocity of oil inside the transformer due to natural circulation is rather low, in the order of 10^{-3} to 10^{-2} m/s. There are also some regions where the fluid is circulated, which clearly is an evidence of the buoyancy force that directs the fluid upward through the channels of active part due to heat absorption and downwards in the fined areas of the tank.

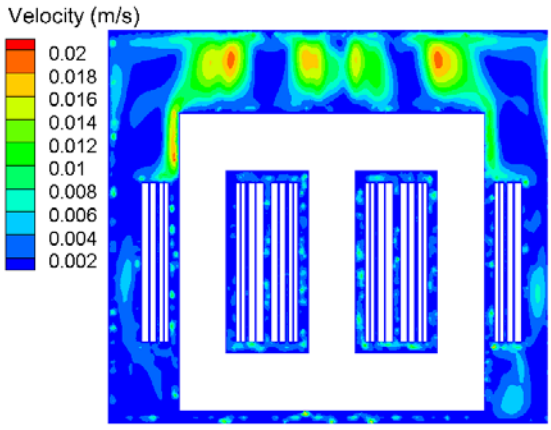

Figure 9 Velocity contour Z=0 plane

4 Conclusion

A three dimensional thermal analysis of a 200 kVA distribution transformer has been performed numerically using a CFD software in order to determine the hotspot temperature. Furthermore, the temperature-dependent properties of transformer oil was also employed in the numerical modeling in order to achieve higher accuracy. The temperature distribution of oil inside the transformer demonstrated that the maximum temperature - called hotspot - occurs in the upper section of windings with the value of 114 ˚C and is

ISBN 978-3-8007-4807-5

located in the top part of the oil channel of the low voltage windings.

5 Literature

[1] Sefidgaran, M.: Mirzaie, M.: Ebrahimzadeh, A.: Reliability model of the power transformer with ONAF cooling. Electrical Power and Energy Systems, Vol. 35, No. 1, 2012. pp. 97-104.

[2] Schneider, J.: et al: Asset management techniques. Electrical Power and Energy Systems, Vol. 28, No. 6, 2006, pp. 643-654.

[3] Brown, E.R.: in Electric Power Distribution Reliability, CRC Press, 2008

[4] Taghikhani, M.A.: A. Gholami, A.: Prediction of hottest spot temperature in power transformer windings with non-directed and directed oil-forced cooling. Electrical Power and Energy Systems, Vol.31, No. 7-8, 2009, pp. 356-364.

[5] Pradhan, M.K.: Ramu, T. S.: Prediction of Hottest Spot Temperature (HST) in Power and Station Transformers. IEEE Transactions on Power Delivery, Vol.18, No.3, 2003, pp. 1275- 1283.

[6] Susa, D.: Nordmann, H.: A Simple Model for Calculating Transformer Hot-Spot Temperature. IEEE transactions on power deliver, Vol. 24, No. 3, 2009. pp. 1257-1265.

[7] Radakovic, Z.: Jevtic, M.: Das, B.: Dynamic Thermal Model of Kiosk Oil Immersed Transformers Based on the Thermal Buoyancy Driven Air Flow. Electrical Power and Energy Systems, Vol. 92, 2017 pp. 14-24.

[8] El Wakil, N.: Chereches, N.-C.: Padet, J.: Numerical Study of Heat Transfer and Fluid Flow in a Power Transformer. International Journal of Thermal Sciences, Vol.45, No. 6, 2006, pp. 615-626.

[9] Oh, K.-J.: Ha, S.-S.: Numerical Calculation of Turbulent Natural Convection in a Cylindrical Transformer Enclosure. Asian Research, Vol. 28, 1999, pp. 429-441.

[10] Tsilia, M.A.: et al., Power Transformer Thermal Analysis by Using an Advanced Coupled 3D Heat Transfer and Fluid Flow FEM Model. International Journal of Thermal Sciences, Vol. 53, 2012, pp.188-201.

[11] Chereches, N.C.: et al., Numerical study of cooling solutionsinside a power transformer. Energy Procedia, Vol. 112, 2017, pp. 314-321.

[12] Eslamian, M.: Vahidi, B.: Eslamian, A.: Thermal Analysis of Cast-resin Dry-type Transformers. Energy Conversion and Management, Vol. 52, No. 7, 2011, pp. 2479-2488.

[13] Versteeg, H.K.: Malalasekera, W.: Introduction to Computational Fluid Dynamics. 1 ed. Wiley,1992.

[14] Cengel, Y.A. and A.j. Ghajar, Heat and mass transfer: Fundamentals & applications. 5 ed. New YorK: McGraw-Hill Education, 2015.

ISBN 978-3-8007-4807-5